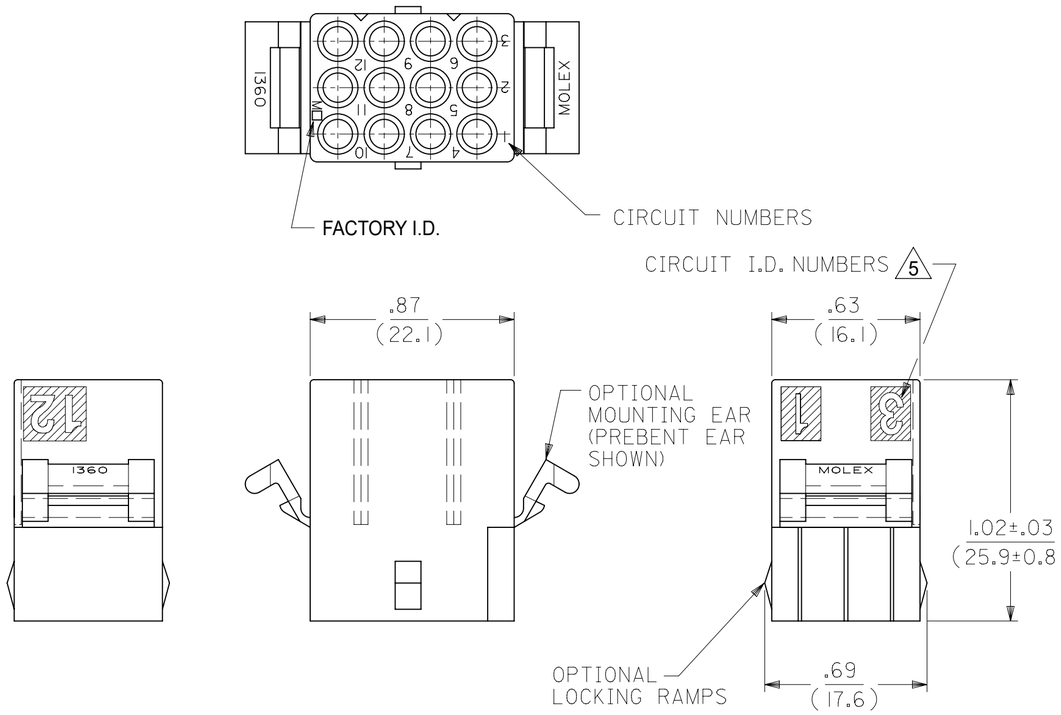

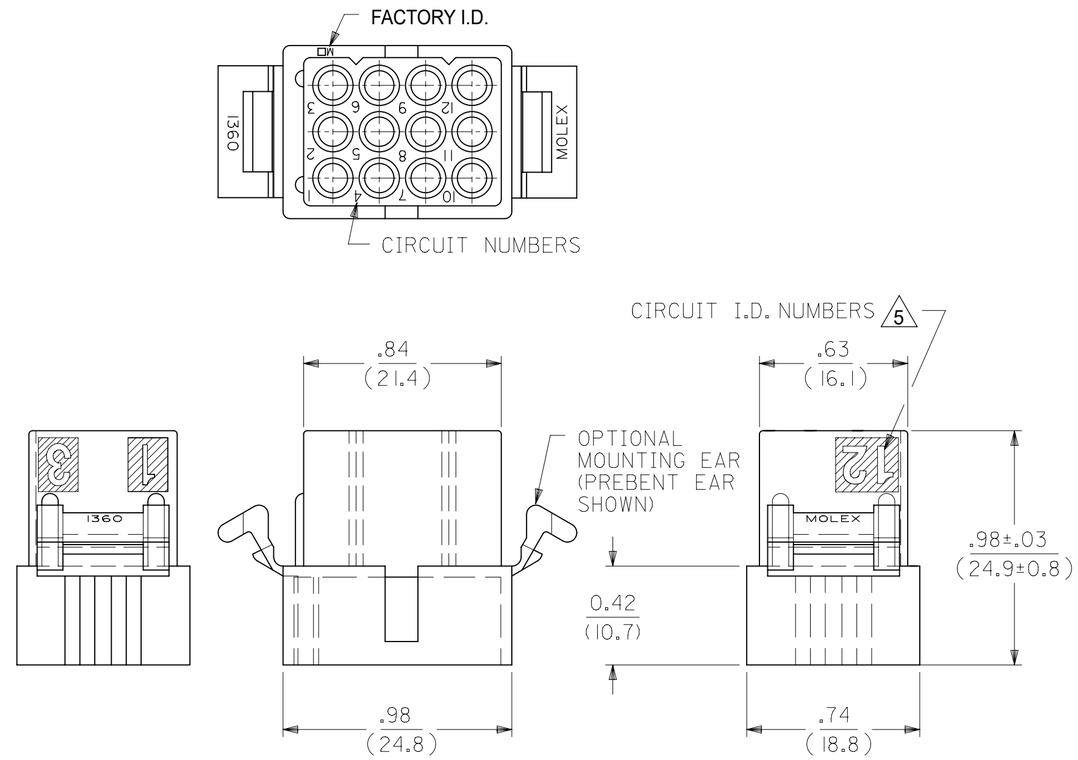

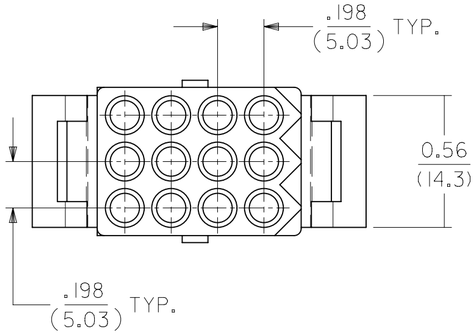

RECEPTACLE

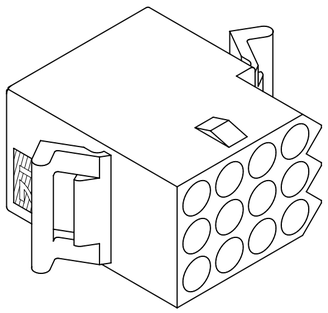

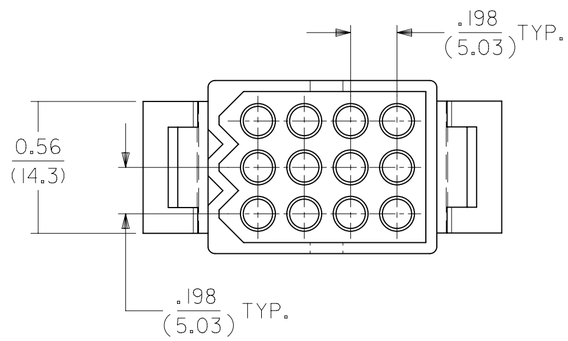

PLUG

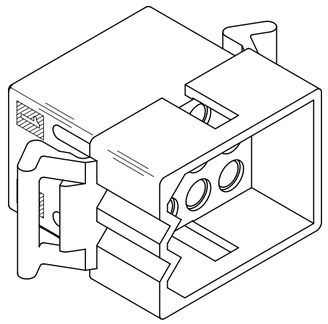

THIS DRAWING CONTAINS INFORMATION THAT IS PROPRIETARY TO MOLEX ELECTRONIC TECHNOLOGIES, LLC AND SHOULD NOT BE USED WITHOUT WRITTEN PERMISSION

DIMENSION UNITS	SCALE
IN/MM	2:1

GENERAL TOLERANCES (UNLESS SPECIFIED)

	MM	INCH
4 PLACES	±	±
3 PLACES	±	± 0.01
2 PLACES	± 0.25	± 0.014
1 PLACE	± 0.35	±
0 PLACES	±	±
ANGULAR TOL		± 2.0 °

DRAFT WHERE APPLICABLE MUST REMAIN WITHIN DIMENSIONS

CURRENT REV DESC: REMOVED OBSOLETED PARTS AS PER PCN 511086

EC NO: 699022
DRWN: RPRABHUM 2022/03/09
CHK'D: GGA 2022/03/23
APPR: GGA 2022/03/23

INITIAL REVISION:
DRWN: KBW 1989/01/03
APPR: FSMITH 2014/11/13

THIRD ANGLE PROJECTION | DRAWING: C-SIZE | SERIES: 1360

molex

.093/(2.36) HOUSINGS
PLUG AND RECEPTACLE 12 CKT, .198/(5.03)CTR.

PRODUCT CUSTOMER DRAWING

DOCUMENT NUMBER	DOC TYPE	DOC PART	REVISION
SD-1360-X	PSD	001	AE3

MATERIAL NUMBER	CUSTOMER	SHEET NUMBER
SEE CHART	GENERAL MARKET	1 OF 2

DOCUMENT STATUS	P1	RELEASE DATE	2022/03/23 06:00:54

FORMAT: Eng-lega-master-lb-prod-C
REVISION: E1
DATE: 2021/05/01

PLUG	
ORDER NO	ENG NO
03-09-2121	1360-P

RECEPTACLE	
ORDER NO	ENG NO
03-09-1121	1360-R △6
03-09-1125	1360-R2 △6
03-09-1126	1360-R3
03-09-6121	1360-RBK
03-09-6125	1360-R2BK
03-09-6126	1360-R3BK

LEGEND: PLUG

1360-P***

P = PLUG

BLANK = WITHOUT EARS
1 = WITH MOUNTING EARS

COLOR:
BLANK = NATURAL COLOR
AM = AMBER BK = BLACK BU = BLUE
BN = BROWN GY = GRAY GN = GREEN
OR = ORANGE RD = RED YW = YELLOW

LEGEND: RECEPTACLE

1360-R***

R = RECEPTACLE

OPTION	PREBENT EARS	LOCKING RAMP
BLANK	X	
1		
2	X	X
3		X

X = PRESENT

COLOR:
BLANK = NATURAL COLOR
AM = AMBER BK = BLACK BU = BLUE
BN = BROWN GY = GRAY GN = GREEN
OR = ORANGE RD = RED YW = YELLOW

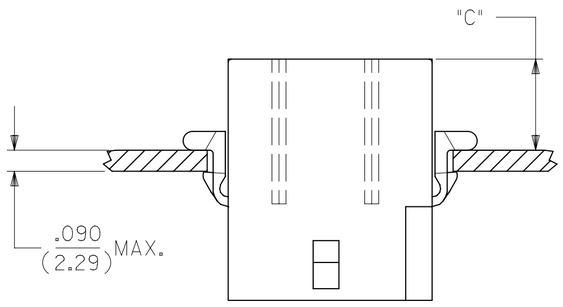

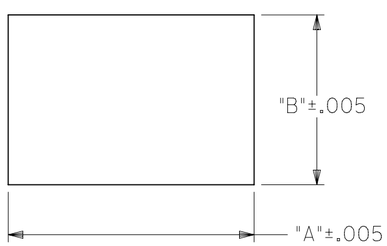

RECOMMENDED PANEL OPENING

HOUSING	DIM. "A"	DIM. "B"	"C" PREBENT EAR	"C" STANDARD EAR
PLUG	1.155/(29.34)	.760/(19.30)	.40/(10.2)	.36/(9.1)
RECEPT.	1.050/(26.67)	.725/(18.42)	.41/(10.4)	.37/(9.4)

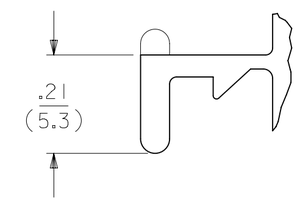

DETAIL A

.093/(2.36) STANDARD MOUNTING EAR
(SCALE 4:1)

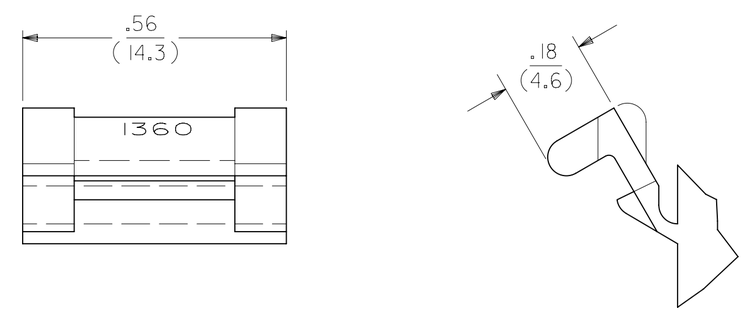

DETAIL B

.093/(2.36)PREBENT MOUNTING EAR
(SCALE 4:1)

NOTES:
1. MATERIAL: NYLON TYPE 6/6, UL94V-2
2. FINISH: N/A
3. PRODUCT SPECIFICATION: PS-02-09, PS-43660-9999
4. PACKAGING SPECIFICATION: PK-1360-001
5. △5 CIRCUIT I.D. NUMBERS ON SIDE OF HOUSING APPEAR ON PARTS FROM TOOLS BUILT AFTER 10/22/91
6. △6 WHERE DENOTED IN CHART, TOOLS ARE BUILT WITH PREBENT MOUNTING EARS PER DETAIL B AND SUPERSEDE ALL TOOLS PREVIOUSLY BUILT WITH THE STANDARD EARS.
7. PARTS CONFORM TO CLASS B REQUIREMENTS OF COSMETIC SPECIFICATION PS-45499-002.

THIS DRAWING CONTAINS INFORMATION THAT IS PROPRIETARY TO MOLEX ELECTRONIC TECHNOLOGIES, LLC AND SHOULD NOT BE USED WITHOUT WRITTEN PERMISSION

DIMENSION UNITS	SCALE
IN/MM	2:1

GENERAL TOLERANCES (UNLESS SPECIFIED)

	MM	INCH
4 PLACES	±	±
3 PLACES	±	± 0.01
2 PLACES	± 0.25	± 0.014
1 PLACE	± 0.35	±
0 PLACES	±	±
ANGULAR TOL	± 2.0 °	

DRAFT WHERE APPLICABLE MUST REMAIN WITHIN DIMENSIONS

CURRENT REV DESC: REMOVED OBSOLETED PARTS AS PER PCN 511086

EC NO: 699022
DRWN: RPRABHUM 2022/03/09
CHK'D: GGA 2022/03/23
APPR: GGA 2022/03/23

INITIAL REVISION:
DRWN: KBW 1989/01/03
APPR: FSMITH 2014/11/13

THIRD ANGLE PROJECTION | DRAWING: C-SIZE | SERIES: 1360

molex

.093/(2.36) HOUSINGS
PLUG AND RECEPTACLE 12 CKT, .198/(5.03)CTR.

PRODUCT CUSTOMER DRAWING

DOCUMENT NUMBER	DOC TYPE	DOC PART	REVISION
SD-1360-X	PSD	001	AE3

MATERIAL NUMBER	CUSTOMER	SHEET NUMBER
SEE CHART	GENERAL MARKET	2 OF 2

DOCUMENT STATUS	P1	RELEASE DATE	2022/03/23 06:00:54

FORMAT: Eng-legal-master-tb-prod-C
REVISION: E1
DATE: 2021/05/21