Alle Rechte vorbehalten/ *All rights reserved*

Mating face according to MIL-C-24308 / DIN 41 652 / CECC 75301-802

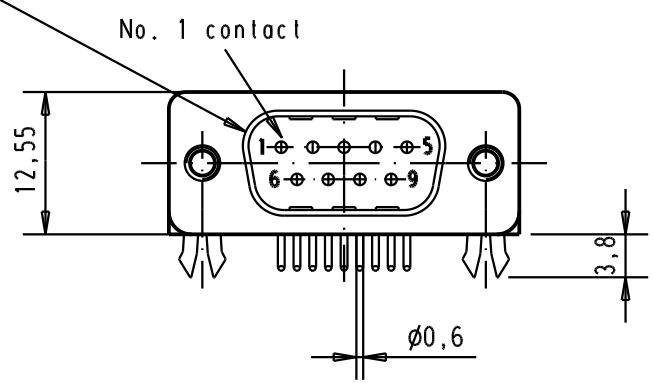

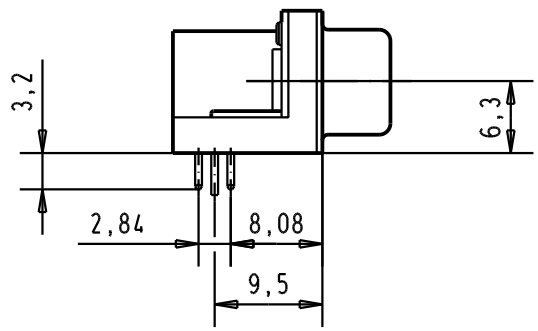

Printed board layout(1,6±0,2 thick)
View component side

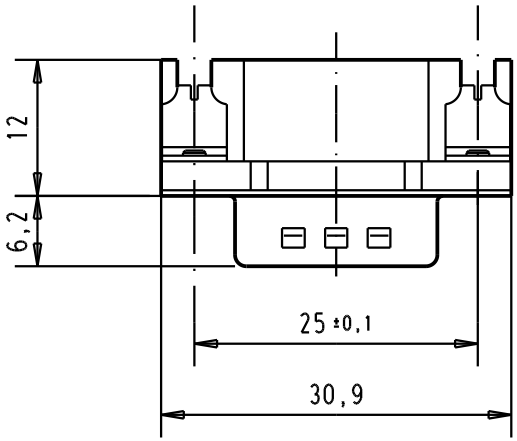

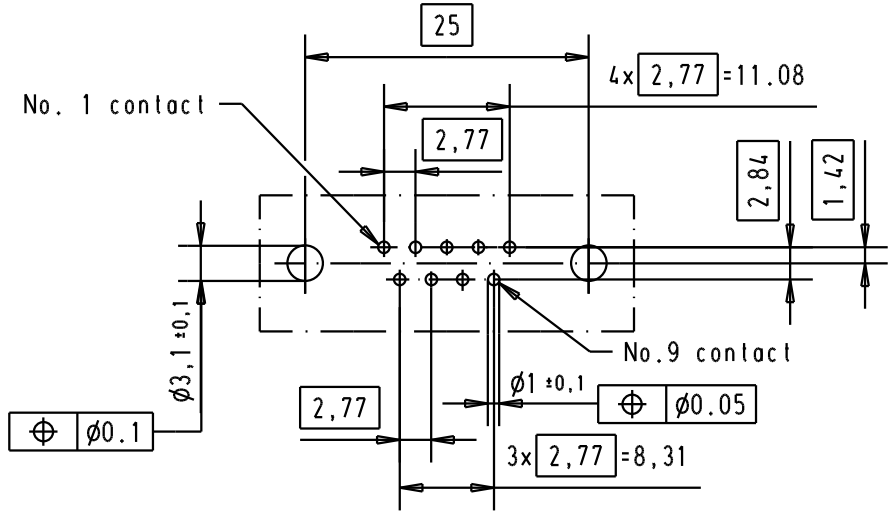

Connector insertion force on PCB = maxi 80 N

09 68 163 7811	M3	3			
09 68 163 5811	M3	0,76 µm Au			
09 68 163 7812	4-40 UNC	3	32121	28-JUN-04	TR
09 68 163 5812	4-40 UNC	0,76 µm Au	29751	28-FEB-02	CV
Part number	nut thread	Performance level	Mod.	Dat.	Name

	Dat.	Name
Detail.	28-FEB-02	CV
Insp.		
Stand.		

All Dim. in mm
Orig. Size DIN A 4

D-Sub male connector,
US Footprint 9 poles
with solder pins,nuts
and grounding board lock

Maßstab/ *Scale* 1,5:1

HARTING EURL
F-95972 Paris

TB 09 68 163 X81X

Sub.

Blatt/ *Page* 1