REV.	ECN. NO.	APPD.
A		

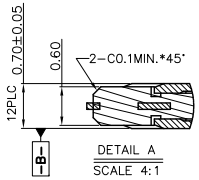

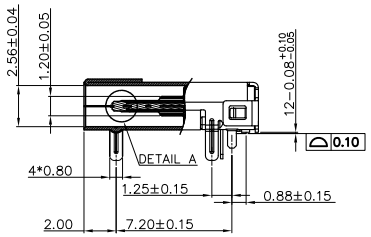

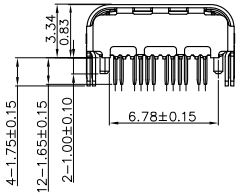

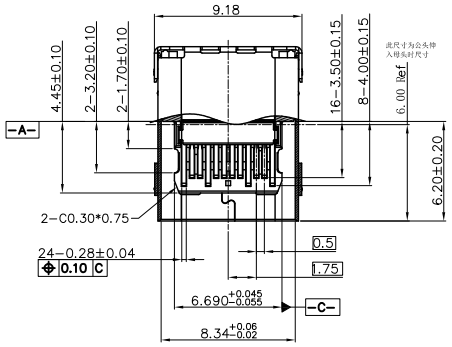

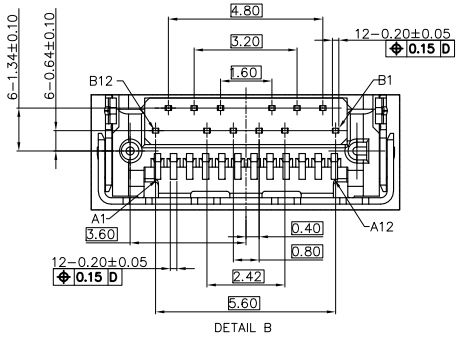

NOTE:
1.MATERIAL:
1.1 INSULATOR: HIGH TEMPERATURE PLASTIC UL 94 V-0;
1.2 CONTACT: COPPER ALLOY(T=0.15mm)
1.3 SHELL: STAINLESS STEEL(T=0.20mm)
2.ELECTRICAL CHARACTERISTICS;
2.1 CONTACT RESISTANCE: 40mΩ Max FOR INITIAL. 10mΩ CHANGE AFTER TEST. MEASURE AT 20mV, 100mA.
2.2 CONTACT CURRENT RATING: 5A FOR VBUS PIN; 1.25A FOR VCONN PIN.
2.3 DIELECTRIC WITHSTANDING VOLTAGE: 100V AC R.M.S.
2.4 INSULATION RESISTANCE 100MΩ Min
2.5 OPERATING TEMPERATURE: -40°C ~ 85°C
3 MECHANICAL CHARACTERISTICS:
3.1 MATING FORCE: 5~20 N.
3.2 UNMATED FORCE: 8~20N AFTER TEST
3.3 DURABILITY: 10,000 CYCLES

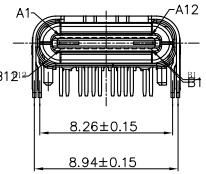

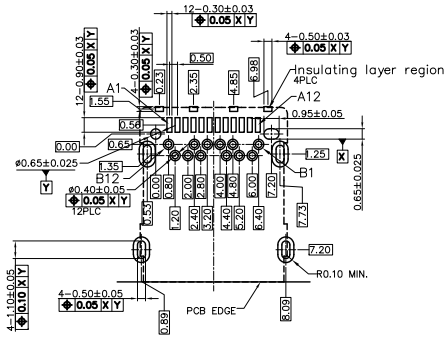

RECOMMENDED PCB LAYOUT (COMPONENT SIDE)

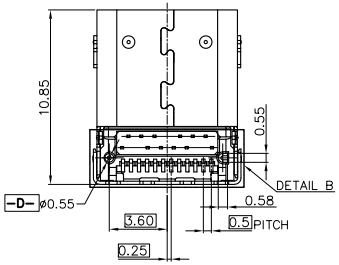

A1	GND	B12	GND
A2	SSTXP1	B11	SSRXP1
A3	SSTXN1	B10	SSRXN1
A4	VBUS	B9	VBUS
A5	CC1	B8	SBU2
A6	DP1	B7	DN2
A7	DN1	B6	DP2
A8	SBU1	B5	CC2
A9	VBUS	B4	VBUS
A10	SSRXN2	B3	SSTXN2
A11	SSRXP2	B2	SSTXP2
A12	GND	B1	GND
PIN	SIGNAL NAME	PIN	SIGNAL NAME

X. ± 0.30	X.° ± 5°	UNITS mm	NAME(INTENDED USE)	MINTRON CO.,LTD.	
.X ± 0.20	.X° ± 2°	MAT'L	PART NO.(INTENDED USE)	TITLE: TYPE C母座板上前插后贴L=10.85	
.XX ± 0.10	.XX° ± 1°				
.XXX ± 0.05	.XXX° ± 0.5°	FINISH	APPD: SUNNY	DWG NO.: 23001-UCAF002-X	
TYPE C CONNNECTOR		Q'TY	CHKD: LISA	SCALE 1/1	SHEET 1/1	REV. A
			DR: ZOE 2022-06-10		