This document was generated on 02/11/2013

PLEASE CHECK WWW.MOLEX.COM FOR LATEST PART INFORMATION

Part Number: 50397-8000

Status: Active

Description: 2.50mm Pitch Crimp Terminal, 50397, Reel

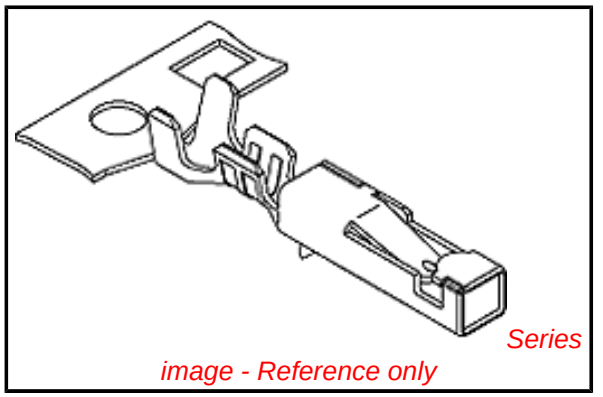

Documents:

3D Model
Drawing (PDF)
Product Specification PS-500592-001 (PDF)
Product Specification PS-51111-001 (PDF)
Product Specification PS-51111-003 (PDF)
Packaging Specification SPK-50397-001 (PDF)
RoHS Certificate of Compliance (PDF)

General

Product Family	Crimp Terminals
Series	50397
Application	Signal
Crimp Quality Equipment	Yes
Product Name	N/A
UPC	800754317719

Physical

Gender	Female
Material - Metal	Phosphor Bronze
Material - Plating Mating	Tin
Material - Plating Termination	Tin
Net Weight	89.600/mg
Packaging Type	Reel
Plating min - Mating	0.889µm
Plating min - Termination	0.914µm
Termination Interface: Style	Crimp or Compression
Wire Insulation Diameter	1.15-1.80mm
Wire Size AWG	22, 24, 26, 28
Wire Size mm²	N/A

Material Info

Reference - Drawing Numbers

Packaging Specification	SPK-50397-001
Product Specification	PS-500592-001, PS-51111-001, PS-51111-003, RPS-500592-001, RPS-500592-002, RPS-500592-003, RPS-51111-004, RPS-51111-005, RPS-51111-007, RPS-51112-003
Sales Drawing	SD-50397-001

EU RoHS
ELV and RoHS Compliant

China RoHS

REACH SVHC
Contains SVHC: No

Low-Halogen Status
Low-Halogen

Need more information on product environmental compliance?

Email productcompliance@molex.com
For a multiple part number RoHS Certificate of Compliance, click here

Please visit the Contact Us section for any non-product compliance questions.

Search Parts in this Series
50397Series

Mates With
50398

Use With
51111

Application Tooling | **FAQ**

Tooling specifications and manuals are found by selecting the products below. Crimp Height Specifications are then contained in the Application Tooling Specification document.

Global

Description	Product #
T2 Terminator Die	0638535000
Extraction Tool	0638132700
FineAdjust™ Applicator	0638635000
Hand Crimp Tool for 2.50mm Pitch	0638238000

Wire to Wire Crimp Terminals

Japan

Description	Product #
Applicator for M211A Bench Press, 22-28 AWG Wire	0573163000
Side-Feed Applicator For Full-Auto Machine	0573163200
Extraction Tool	0573166100

This document was generated on 02/11/2013

PLEASE CHECK WWW.MOLEX.COM FOR LATEST PART INFORMATION