molex
one company › a world of innovation

This document was generated on 04/03/2012

PLEASE CHECK WWW.MOLEX.COM FOR LATEST PART INFORMATION

Part Number: 50420-8000

Status: Active

Description: OBD-II Crimp Terminal, Female, 50420, 4.00mm Pitch

Documents:

Drawing (PDF)
Product Specification PS-51115-001 (PDF)
Application Specification AS-51115-001 (PDF)
RoHS Certificate of Compliance (PDF)

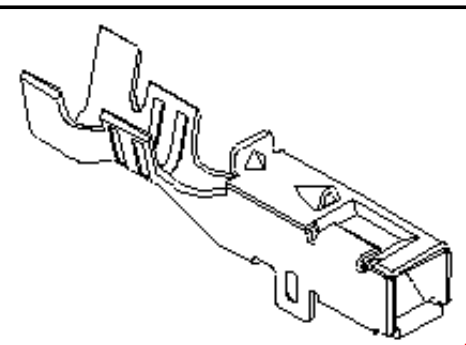

Series

image - Reference only

General

Product Family	Crimp Terminals
Series	50420
Application	Power
Crimp Quality Equipment	Yes
Product Name	OBD-II

Physical

Gender	Female
Material - Metal	Phosphor Bronze
Material - Plating Mating	Tin
Material - Plating Termination	Tin
Packaging Type	Reel
Termination Interface: Style	Crimp or Compression
Wire Insulation Diameter	1.60-1.40mm
Wire Size AWG	20, 22
Wire Size mm²	0.50-0.30

Material Info

Reference - Drawing Numbers

Application Specification	AS-51115-001
Product Specification	PS-51115-001
Sales Drawing	SD-50420-8*00

EU RoHS
ELV and RoHS Compliant
REACH SVHC
Contains SVHC: No
Low-Halogen Status
Low-Halogen

China RoHS

Need more information on product environmental compliance?

Email productcompliance@molex.com
For a multiple part number RoHS Certificate of Compliance, click here

Please visit the Contact Us section for any non-product compliance questions.

Search Parts in this Series
50420Series

Use With
51115 , 51116

Application Tooling | **FAQ**

Tooling specifications and manuals are found by selecting the products below. Crimp Height Specifications are then contained in the Application Tooling Specification document.

Global

Description	Product #
FineAdjust™ Applicator for OBD II 4.00mm Wire-to-Wire Crimp Terminal, 0.30-0.85mm² and 18-22 AWG	0639009700
Hand Crimp Tool	0638119500
Extraction Tool	0011030043

Japan

Description	Product #

Applicator for M211A 0573263000
Bench Press, 18-22
AWG Wire

This document was generated on 04/03/2012
PLEASE CHECK WWW.MOLEX.COM FOR LATEST PART INFORMATION