4 mm Square SMD Light Touch Switches

Type: **EVQP6/EVQ6P6/EVQ7P6/EVQ9P6**

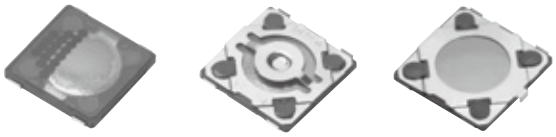

■ Features

- External dimensions : 4.1 mm×4.1 mm
  Height :Without Push Plate 0.35 mm, With Push Plate 0.58 mm
  :Without Push Plate·With Ground Terminal 0.43 mm
- Long-life :1,000,000 cycles min.
  (Operating Force 1.0N, 1.6 N Type)
- Dust-proof structure

■ Recommended Applications

- Operating switches for portable electronic equipment
  (Mobile phones, Camcorders, Portable audio players, etc.).

■ Explanation of Part Numbers

1	2	3	4	5	6	7	8	9
E	V	Q				B		
Product Code			Type・Operating Force				Product Height	

■ Specifications

Type		Snap action / Push-on type SPST
Electrical	Rating	10 μA 2 V DC to 20 mA 15 V DC (Resistive load)
	Contact Resistance	500 mΩ max.
	Insulation Resistance	50 MΩ min. (at 100V DC)
	Dielectric Withstanding Voltage	100 V AC for 1 minute
	Bouncing	3 ms max. (ON) 10 ms max. (OFF)
Mechanical	Operating Force	1.0 N, 1.6 N, 2.4 N
	Travel	0.20 mm (EVQ7P6 : 0.15 mm)
Endurance	Operating Life	1.0 N, 1.6 N : 1,000,000 cycles min. 2.4 N : 500,000 cycles min.
Operating Temperature		−20 °C to +70 °C
Storage Temperature		−40 °C to +85 °C (Bulk) −20 °C to +60 °C (Taping)
Minimum Quantity/Packing Unit		10,000 pcs. Embossed Taping (Reel Pack)
Quantity/Carton		50,000 pcs.

Note: Non washable

Design and specifications are each subject to change without notice. Ask factory for the current technical specifications before purchase and/or use.
Should a safety concern arise regarding this product, please be sure to contact us immediately.

■ Dimensions in mm (not to scale)

No. 1

EVQP6D
EVQP6P

(Embossed Taping)

Surface mount
For reflow soldering
Without push plate

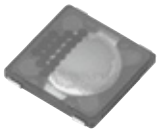

General dimension tolerance : ± 0.1
( )dimensions are reference dimensions.

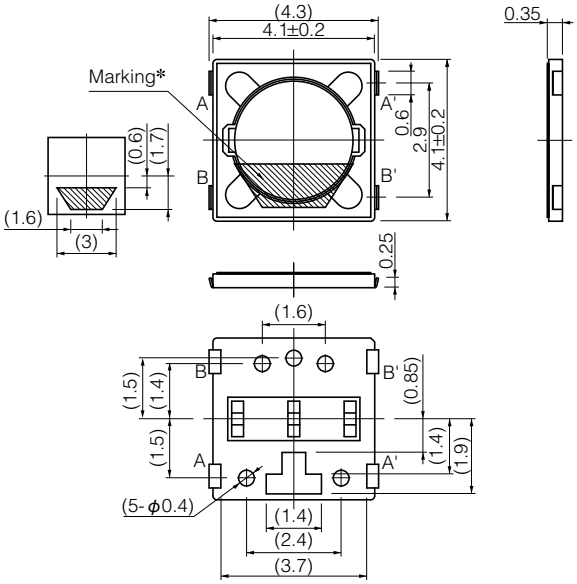

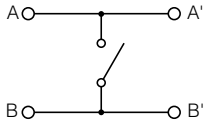

Circuit diagram

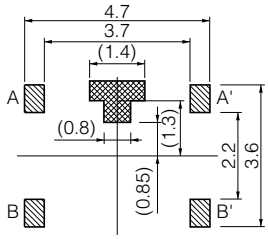

PWB land pattern for reference

Part of A-A' terminal is exposed at ▩ area.
Any land pattern or vias shall not be provided at ▩ area.

*Marking varies according to push force.

Part Numbers	Operating Force	Height	Operating Life
EVQP6DB35	1.6 N	0.35 mm	1,000,000 cycles
EVQP6PB35	2.4 N	0.35 mm	500,000 cycles

No. 2

EVQP6L
EVQP6Y

(Embossed Taping)

Surface mount
For reflow soldering
With push plate

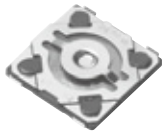

General dimension tolerance : ± 0.1
( )dimensions are reference dimensions.

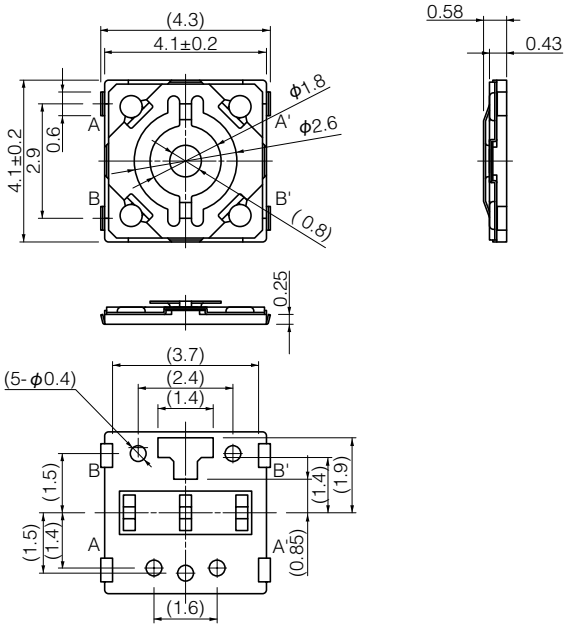

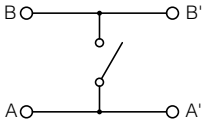

Circuit diagram

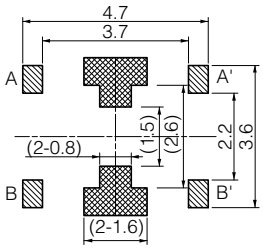

PWB land pattern for reference

Any land pattern or vias shall not be provided at ▩ area.

Part Numbers	Operating Force	Height	Operating Life
EVQP6LB55	1.6 N	0.58 mm	1,000,000 cycles
EVQP6YB55	2.4 N	0.58 mm	500,000 cycles

Design and specifications are each subject to change without notice. Ask factory for the current technical specifications before purchase and/or use.
Should a safety concern arise regarding this product, please be sure to contact us immediately.

© Panasonic Corporation 2019

■ Dimensions in mm (not to scale)

No. 3

EVQ7P6
EVQ6P6
EVQ9P6

(Embossed Taping)

Surface mount
For reflow soldering
Without push plate
With Ground Terminal

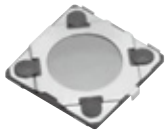

General dimension tolerance : ± 0.1
( )dimensions are reference dimensions.

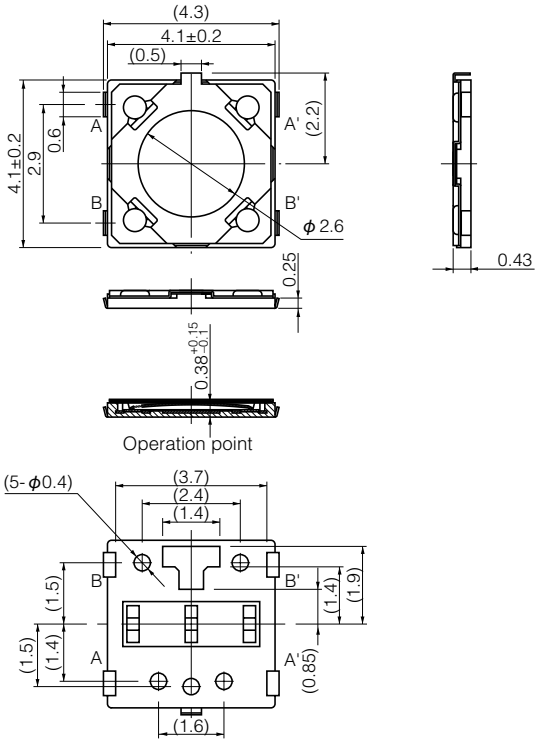

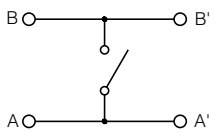

Circuit diagram

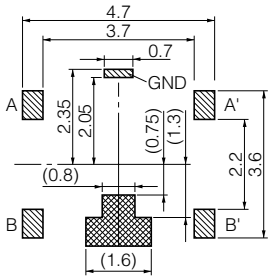

PWB land pattern for reference

Part of B-B' terminal is exposed at ▩ area.
Any land pattern or vias shall not be provided at ▩ area.

Part Numbers	Operating Force	Height	Operating Life
EVQ7P6B40	1.0 N	0.43 mm	1,000,000 cycles
EVQ6P6B40	1.6 N	0.43 mm	1,000,000 cycles
EVQ9P6B40	2.4 N	0.43 mm	500,000 cycles

Design and specifications are each subject to change without notice. Ask factory for the current technical specifications before purchase and/or use.
Should a safety concern arise regarding this product, please be sure to contact us immediately.

© Panasonic Corporation 2019

■ Recommended Reflow Soldering Conditions

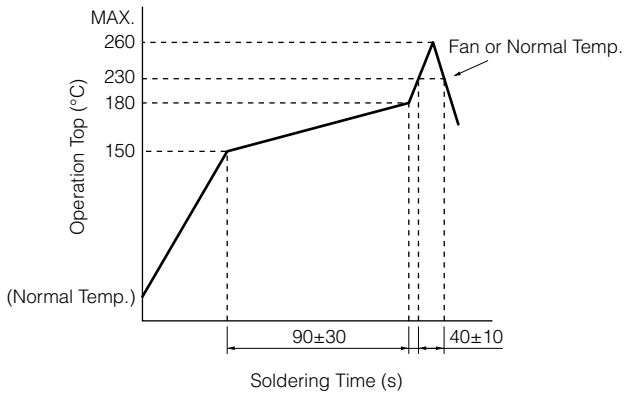

● Embossed Carrier Taping

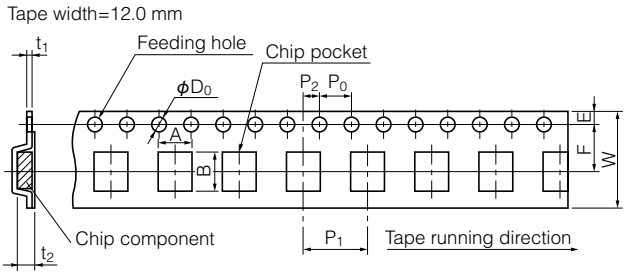

Taping condition : Lack of products in the middle of taping should be one MAX, but total quantity specified in the specifications should be secured.
Peeling off strength of top tape : It should be within 0.2N to 1.0N at 165 degree in peeling off angle.
Joint of carrier tape : One joint per one reel may exist.

Unit: mm

Part No.	Height	A	B	W	F	E	P_1	P_2	P_0	D_0 Dia.	t_1	t_2
EVQP6	0.35/0.58	4.0±0.2	5.0±0.2	$12.0^{+0.3}_{-0.1}$	5.5±0.1	1.75±0.10	8.0±0.1	2.0±0.1	4.0±0.1	$1.5^{+0.1}_{-0}$	0.30±0.05	$0.5/0.7^{+0.2}_{-0.1}$
EVQ6P6 EVQ7P6 EVQ9P6	0.43											

■ Recommended Shape of Test Pole

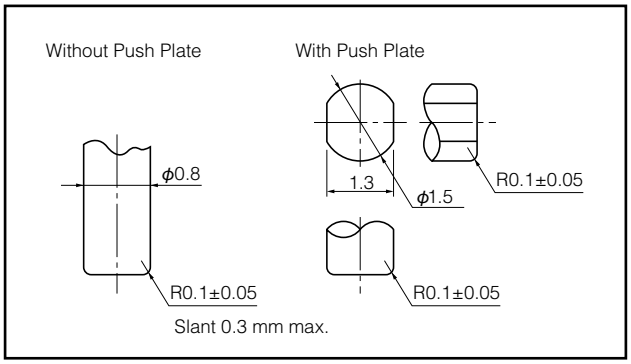

■ Recommended Operating Conditions

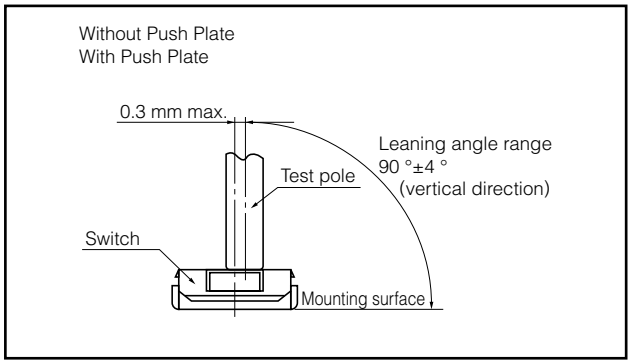

Design and specifications are each subject to change without notice. Ask factory for the current technical specifications before purchase and/or use.
Should a safety concern arise regarding this product, please be sure to contact us immediately.

© Panasonic Corporation 2019

Requests to customers

Specifications and warranty range of this product

The contents and data of this product and its specifications and Web site (hereinafter referred to as "specifications") are subject to change (including specifications, manufacturing facility, discontinuing products). Consequently, when you use this product for mass production, Panasonic Corporation, Electromechanical Control Business Division (hereinafter referred to as "Panasonic Corporation") asks you to contact one of our customer service representatives and check that the details listed in Web site and catalog are commensurate with the most up-to-date information.

Even if there is a mistake, inaccurate description, or incomplete description in the contents of Web site and catalog or the disclosure related to any product, Panasonic Corporation and its affiliates, agents, employees, or all persons act for us (hereinafter collectively referred to as "Panasonic Corporation") are not responsible for it and we will not take any liability.

Panasonic Corporation guarantees that this product will correspond to the contents described in specifications during the warranty period specified in specifications. Further, the data described in specifications is the initial value at the time of shipment of this product, and it shall not guarantee that it operates in a specific application, whether explicitly or implicitly. Panasonic Corporation will not guarantee the suitability of this product for any particular purpose. Panasonic Corporation asks you to check the suitability for specific applications of this product.

Panasonic Corporation refuses to the maximum extent permitted by law for the followings:

1) any liability that may occur due to the use or application of the product,
2) all liability including special damage, indirect or incidental damage, and all other damages,
3) all implied warranties, including the implied warranty of suitability for a particular purpose, the implied warranty of non-infringement, and the implied warranty of merchantability.

The description of suitability of a product for certain applications is based on typical requirements we may know of using our products for general purpose use.
These descriptions are not binding on the suitability of the product for a particular application. It is a customer's responsibility to verify whether or not the specific product, which has the usage rights described in the specifications exchanged with us, is suitable for use in a specific purpose. The parameters given in catalogs or specifications may vary depending on the application and performance may change over time. All operating parameters, including general parameters, must be verified by customer for each application.
The terms and conditions of purchase contract with Panasonic Corporation, including warranty contents stated in contract and any other contents, will not be expanded or modified by product specifications.
Unless explicitly stated otherwise,our products are not designed for medical described in [Safety Precautions] below, lifesaving, life support, or for any application where failure of our products may cause physical injury or death. If you use or sell our product for any purpose other than its stated use, that action is at your own responsibility.
Nothing in this document or any actions of Panasonic Corporation is permitted to enforce or use any intellectual property right, whether expressly or implicitly, and whether it is estoppel or not.

Safety precautions

Panasonic Corporation is consistently striving to improve quality and reliability. However,the fact remains that electrical components and devices generally cause failures at a given statistical probability. Furthermore, their durability varies with use environments or use conditions. In this respect, check for actual electrical components and devices under actual conditions before use. Continued usage in a state of degraded condition may cause abnormal heat, smoke or fire due to deteriorated insulation, or may cause loss of product functionality due to continuityfailure. Carry out safety design and periodic maintenance including redundancy design, design for fire spread prevention, and design for malfunction prevention so that no accidents resulting in injury or death, fire accidents, or social damage will be caused as a result of failure of the products or ending life of the products.

The products are designed and manufactured for the purpose of being used for general electronic equipment (such as AV equipment, household products, business equipment, office equipment, communication equipment) for general purpose standard applications.
Make sure standards,laws and regulations in case the products are incorporated to machinery, system, apparatus, and so forth.
With regard to the mentioned above, confirm the conformity of the Products by yourself.
Do not use the Products for the application which breakdown or malfunction of Products may cause damage to the body or property.

1) usage intended to protect the body and ensure security of life
2) application which the performance degradation or quality problems, such as breakdown, of the products may directly result in damage to the body or property

It is not allowed the use of products by incorporating into machinery and systems indicated below because the conformity,performance, and quality of products are not guaranteed under such usage.

1) transport machinery (cars, trains, boats and ships, etc.)
2) control equipment for transportation
3) disaster-prevention equipment / security equipment
4) control equipment for electric power generation
5) nuclear control system
6) aircraft equipment, aerospace equipment, and submarine repeater
7) burning appliances
8) military devices
9) medical devices (except for general controls)
10) machinery and systems which especially require the high level of reliability and safety

If you use for the above purposes without exchanging the specifications with us, we shall not guarantee any quality.

©Panasonic Corporation 2020

Disclaimers

We will not accept any quality guarantee, liability for damages and other claims for any reason, if you use it under specific conditions without prior consent to individual specifications. Regarding damage to life/ body/property including third party (including reasonable attorney/lawsuit costs) caused by the use of our products under specific conditions by you or a third party including your customer, in addition to being responsible for resolution, we ask you to agree that Panasonic Corporation/affiliates and the executives/employees/agents(hereinafter referred to as Panasonic Corporation) are protected, and not make us to incur cost and liability and do not claim damages to us. "Our affiliated company" means a company in which Panasonic Corporation directly or indirectly holds a majority of voting rights, or a company that directly or indirectly holds a majority of voting rights of Panasonic Corporation, and a company whose majority of voting rights are held directly or indirectly by the holder who has the majority of voting rights of Panasonic Corporation directly or indirectly.

Acceptance inspection

In connection with the products you have purchased from us or with the products delivered to your premises, please perform an acceptance inspection with all due speed and, in connection with the handling of our products both before and during the acceptance inspection, please give full consideration to the control and preservation of our products.

Warranty period

Unless otherwise stipulated by both parties, the warranty period of our products is one year after the purchase by you or after their delivery to the location specified by you. However, the period for soldering and mounting our products on substrates shall not exceed 6 months at the maximum, after purchase or after delivery to your designated location, under the storage conditions specified separately.

Scope of warranty

In the event that Panasonic Corporation confirms any failures or defects of the products by reasons solely attributable to Panasonic Corporation during the warranty period, Panasonic Corporation shall supply the replacements of the products, parts or replace and/or repair the defective portion by free of charge at the location where the products were purchased or delivered to your premises as soon as possible.
However, the following failures and defects are not covered by the warranty and we are not responsible for such failures and defects.

1) When the failure or defect was caused by a specification, standard, handling method, etc. which was specified by you.
2) When the failure or defect was caused after purchase or delivery to your premises by an alteration in construction, performance, specification, etc. which did not involve us.
3) When the failure or defect was caused by a phenomenon that could not be predicted by the technology at purchasing or contracted time.
4) When the use of our Products deviated from the scope of the conditions and environment set forth in the catalogs and specifications.
5) When, after our Products were incorporated into your products or equipment for use, damage resulted which could have been avoided if your products or equipment had been equipped with the functions, construction, etc. the provision of which is accepted practice in the industry.
6) When the failure or defect was caused by a natural disaster or other force majeure.

The above terms and conditions shall not cover any induced damages by the failure or defects of the products, and not cover your production items which are produced or fabricated by using the products, or are re-mounted after disassembly or removal from mounting substrates. In any case, our responsibility for compensation is limited to the amount paid for the products.

©Panasonic Corporation 2020

Usage environment

Our products are intended for general-purpose and standard use in electronic devices, and are not designed for use in special environments shown belows.
Therefore, use and conditions in the following special environments may affect the product characteristics, please check the performance and reliability at your company before use.

1) Use in liquids such as water, oil, chemicals and organic solvents
2) Use in direct sunlight, outdoor exposure, and dust
3) Use in locations with a lot of corrosive gas such as moisture (such as condensation of resistor, water leakage), sea breeze, Cl_2, H_2S, NH_3, SO_2, NOx.
4) Use in an environment where static electricity and electromagnetic waves are strong
5) When mounting in proximity to heat-generating components or when placing flammable materials such as vinyl wiring in proximity to our products
6) When using this product after sealing with resin etc.
7) When using solvent, water or water-soluble cleaning agent for flux cleaning after soldering (be especially careful with water-soluble flux)
8) Use in an environment with acid or alkali atmosphere
9) Use in an environment where there is excessive shock or vibration

Please make sure to use the voltage below the rated voltage, when using an impact voltage circuit, a transient phenomenon in which a high voltage is applied for a short time, or when a pulsed high voltage is applied.

Product handling

In order to prevent failures and characteristic fluctuations due to external factors (electrostatic stress, overvoltage/overcurrent stress, thermal stress, mechanical stress) during product handling, mounting, and in your process, be sure to observe and use within specifications, considering the range expected for standard applications of general electronic devices.

Certificate of compliance to RoHS directive

The timing for switching to compliant RoHS varies depending on the product.
When you are using stock items and uncertain whether or not it is RoHS compliant, please contact us.

Storage

Our products may be affected by performance deterioration and performance such as solderability, so please avoid storing in the following environment and conditions.

1) Environment where temperature is -10°C or less, +40°C or more, and humidity is 85% RH or more
2) In an atmosphere of corrosive gas
3) Long-term storage of more than 6 months after product delivery
4) A place exposed to direct sunlight

- Please keep it in a packaged state so as not to apply load stress.
- Please use as soon as possible, within 3 month as a guide and up to 6 months.
- If there are remaining items after opening the packing, take appropriate measures to prevent moisture and gas before storing.

After discontinuing production

It is not possible to supply products (including supplies) after production is discontinued.

Intellectual property rights and licenses

The technical information on Web site and catalog shows the typical operation and application circuit examples of the product, so it does not mean to guarantee not to infringe the intellectual property rights of our company or a third party, or to grant licenses.

©Panasonic Corporation 2020

Export

Please follow the laws and regulations of the country concerned, especially the laws and regulations regarding security export control, and carry out the necessary procedures, when you export or provide to non-residents the product, product specifications and technical information on Web site and catalog.

Reprinting/Reproduction

All or part of the information on Web site and catalog are strictly prohibited from being reprinted or reproduced without the written consent of our company.

Resale

If the product on Web site and catalog are resold to another companies without permission, and you receive any claims from them, please note that you will be responsible for it.

©Panasonic Corporation 2020

Safety Precautions

When using our products, no matter what sort of equipment they might be used for, be sure to confirm the applications and environmental conditions with our specifications in advance.

Please contact .....

Panasonic Corporation
Electromechanical Control Business Division
■ 1006, Oaza Kadoma, Kadoma-shi, Osaka 571-8506, Japan
industrial.panasonic.com/ac/e/

Panasonic®

©Panasonic Corporation 2019

ANCTB10E-1 201903-Fd

Specifications are subject to change without notice.