MOSFET

Metal Oxide Semiconductor Field Effect Transistor

CoolMOS™ C6 650V

650V CoolMOS™ C6 Power Transistor
IPD65R950C6

Data Sheet

Rev. 2.1
Final

Industrial & Multimarket

1 Description

CoolMOS™ is a revolutionary technology for high voltage power MOSFETs, designed according to the superjunction (SJ) principle and pioneered by Infineon Technologies. CoolMOS™ C6 series combines the experience of the leading SJ MOSFET supplier with high class innovation. The resulting devices provide all benefits of a fast switching SJ MOSFET while not sacrificing ease of use. Extremely low switching and conduction losses make switching applications even more efficient, more compact, lighter and cooler.

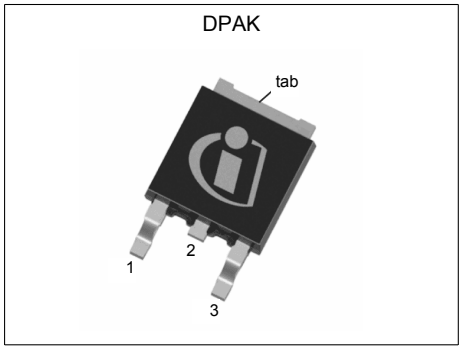

Features

- Extremely low losses due to very low FOM Rdson*Qg and Eoss
- Very high commutation ruggedness
- Easy to use/drive
- Pb-free plating, Halogen free mold compound
- Fully qualified according to JEDEC for Industrial Applications

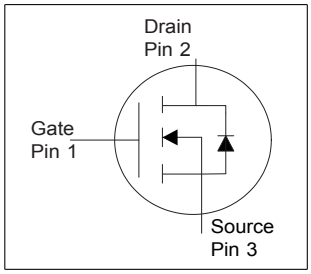

Applications

Hard switching PWM stages and resonant switching PWM stages for e.g. PC Silverbox, Adapter, LCD & PDP TV and Lighting.

Table 1 Key Performance Parameters

Parameter	Value	Unit
V_{DS} @ $T_{j\,max}$	700	V
RDS(on),max	0.95	Ω
Qg,typ	15.3	nC
ID,pulse	12	A
Eoss @ 400V	1.5	µJ
Body diode di/dt	500	A/µs

Type / Ordering Code	Package	Marking	Related Links
IPD65R950C6	PG-TO 252	65C6950	see Appendix A

Table of Contents

Description 2
Table of Contents 3
Maximum ratings 4
Thermal characteristics 5
Electrical characteristics 6
Electrical characteristics diagrams 8
Test Circuits 12
Package Outlines 13
Appendix A 14
Revision History 15
Disclaimer 15

2 Maximum ratings

at T_j = 25°C, unless otherwise specified

Table 2 Maximum ratings

Parameter	Symbol	Values			Unit	Note / Test Condition
		Min.	Typ.	Max.		
Continuous drain current [1]	I_D			4.5	A	T_C = 25°C
				2.8		T_C = 100°C
Pulsed drain current [2]	$I_{D,pulse}$			12	A	T_C = 25°C
Avalanche energy, single pulse	E_{AS}			50	mJ	I_D = 1.0A, V_{DD} = 50V (see table 10)
Avalanche energy, repetitive	E_{AR}			0.15	mJ	I_D = 1.0A, V_{DD} = 50V
Avalanche current, repetitive	I_{AR}			1.0	A	
MOSFET dv/dt ruggedness	dv/dt			50	V/ns	V_{DS} = 0 ... 480V
Gate source voltage	V_{GS}	-20		20	V	static
		-30		30		AC (f > 1 Hz)
Operating and storage temperature	T_j, T_{stg}	-55		150	°C	
Continuous diode forward current	I_S			3.9	A	T_C = 25°C
Diode pulse current	$I_{S,pulse}$			12	A	T_C = 25°C
Reverse diode dv/dt [3]	dv/dt			15	V/ns	V_{DS} = 0 ... 400V, $I_{SD} \leq I_D$, T_j = 25°C (see table 8)
Maximum diode commutation speed	di_f/dt			500	A/µs	
Power dissipation	P_{tot}			37	W	T_C=25°

[1] Limited by $T_{j\,max}$. Maximum duty cycle D=0.75
[2] Pulse width t_p limited by $T_{j\,max}$
[3] Identical low side and high side switch with identical R_G

3 Thermal characteristics

Table 3 Thermal characteristics DPAK

Parameter	Symbol	Values			Unit	Note / Test Condition
		Min.	Typ.	Max.		
Thermal resistance, junction - case	R_{thJC}			3.4	°C/W	
Thermal resistance, junction - ambient [1)]	R_{thJA}			62	°C/W	leaded
			35			SMD version, device on PCB, 6cm² cooling area
Soldering temperature, wave- & reflowsoldering allowed	T_{sold}			260	°C	1.6 mm (0.063 in.) from case for 10s

[1)] Device on 40mm*40mm*1.5mm one layer epoxy PCB FR4 with 6cm² copper area (thickness 70µm) for drain connection. PCB is vertical without air stream cooling.

4 Electrical characteristics

at T_j = 25°C, unless otherwise specified

Table 4 Static characteristics

Parameter	Symbol	Values			Unit	Note / Test Condition
		Min.	Typ.	Max.		
Drain-source breakdown voltage	$V_{(BR)DSS}$	650			V	V_{GS} = 0V, I_D = 1mA
Gate threshold voltage	$V_{GS(th)}$	2.5	3	3.5	V	V_{DS} = V_{GS}, I_D = 0.2mA
Zero gate voltage drain current	I_{DSS}			1	µA	V_{DS} = 650V, V_{GS} = 0V, T_j = 25°C
			10			V_{DS} = 650V, V_{GS} = 0V, T_j = 150°C
Gate-source leakage current	I_{GSS}			100	nA	V_{GS} = 20V, V_{DS} = 0V
Drain-source on-state resistance	$R_{DS(on)}$		0.855	0.95	Ω	V_{GS} = 10V, I_D = 1.5A, T_j = 25°C
			2.223			V_{GS} = 10V, I_D = 1.5A, T_j = 150°C
Gate resistance	R_G		5.5		Ω	f = 1MHz, open drain

Table 5 Dynamic characteristics

Parameter	Symbol	Values			Unit	Note / Test Condition
		Min.	Typ.	Max.		
Input capacitance	C_{iss}		328		pF	V_{GS} = 0V, V_{DS} = 100V, f = 1MHz
Output capacitance	C_{oss}		23		pF	
Effective output capacitance, energy related [1]	$C_{o(er)}$		14		pF	V_{GS} = 0V, V_{DS} = 0 ... 480V
Effective output capacitance, time related [2]	$C_{o(tr)}$		58.5		pF	I_D = constant, V_{GS} = 0V, V_{DS} = 0 ... 480V
Turn-on delay time	$t_{d(on)}$		6.6		ns	V_{DD} = 400V, V_{GS} = 13V, I_D = 2.2A, R_G = 10.2Ω (see table 9)
Rise time	t_r		5.2		ns	
Turn-off delay time	$t_{d(off)}$		41		ns	
Fall time	t_f		13.6		ns	

Table 6 Gate charge characteristics

Parameter	Symbol	Values			Unit	Note / Test Condition
		Min.	Typ.	Max.		
Gate to source charge	Q_{gs}		1.8		nC	V_{DD} = 480V, I_D = 2.2A, V_{GS} = 0 to 10V
Gate to drain charge	Q_{gd}		8		nC	
Gate charge total	Q_g		15.3		nC	
Gate plateau voltage	$V_{plateau}$		5.1		V	

[1] $C_{o(er)}$ is a fixed capacitance that gives the same stored energy as C_{oss} while V_{DS} is rising from 0 to 80% $V_{(BR)DSS}$
[2] $C_{o(tr)}$ is a fixed capacitance that gives the same charging time as C_{oss} while V_{DS} is rising from 0 to 80% $V_{(BR)DSS}$

Table 7 Reverse diode characteristics

Parameter	Symbol	Values			Unit	Note / Test Condition
		Min.	Typ.	Max.		
Diode forward voltage	V_{SD}		0.9		V	V_{GS} = 0V, I_F = 2.2A, T_j = 25°C
Reverse recovery time	t_{rr}		226		ns	V_R = 400V, I_F = 2.2A, di_F/dt = 100A/µs (see table 8)
Reverse recovery charge	Q_{rr}		1.3		µC	
Peak reverse recovery current	I_{rrm}		9.9		A	

5 Electrical characteristics diagrams

Diagram 1: Power dissipation

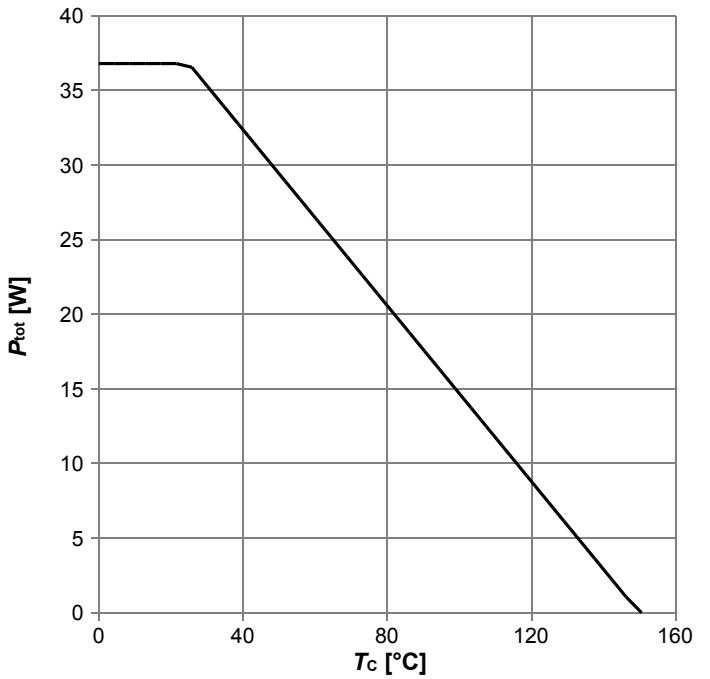

P_{tot}=f(T_C)

Diagram 2: Max. transient thermal impedance

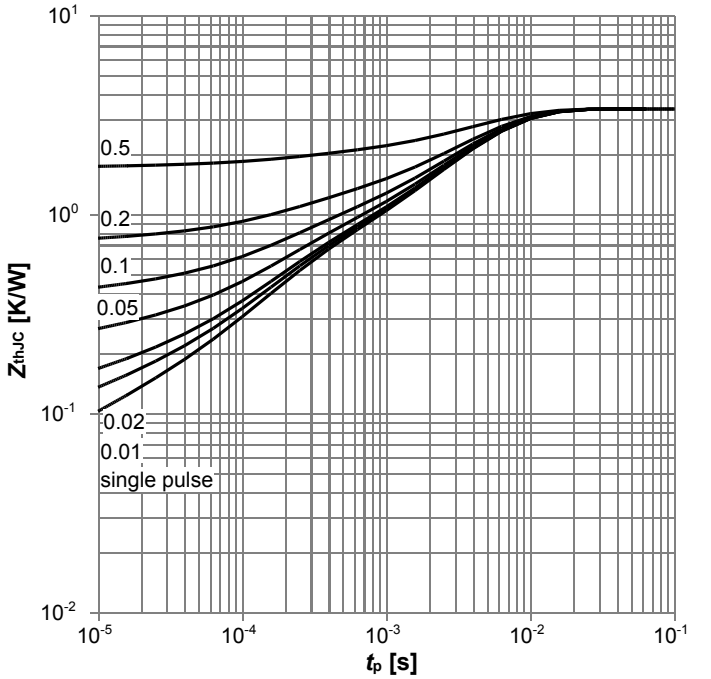

Z_{thJC} =f(t_P); parameter: D=t_p/T

Diagram 3: Safe operating area

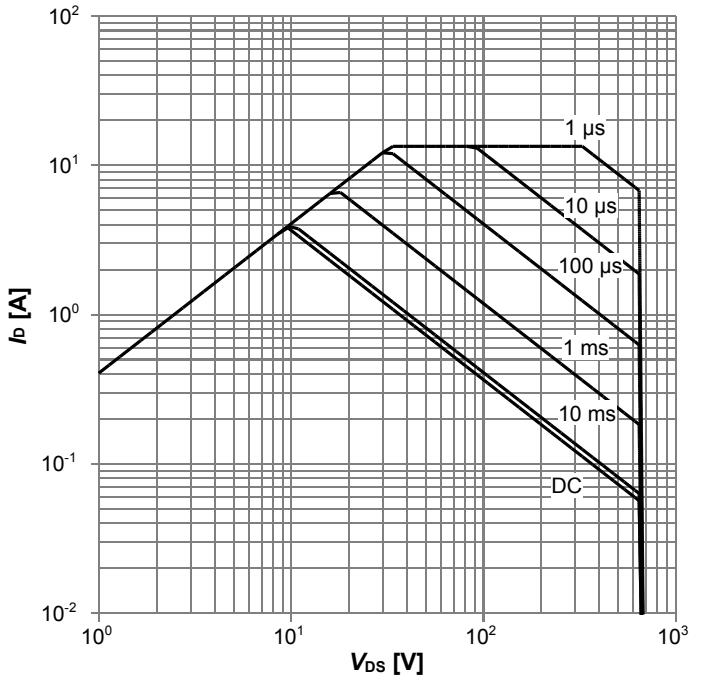

I_D=f(V_{DS}); VGS>7V; T_C=25°C; D=0; parameter: t_p

Diagram 4: Safe operating area

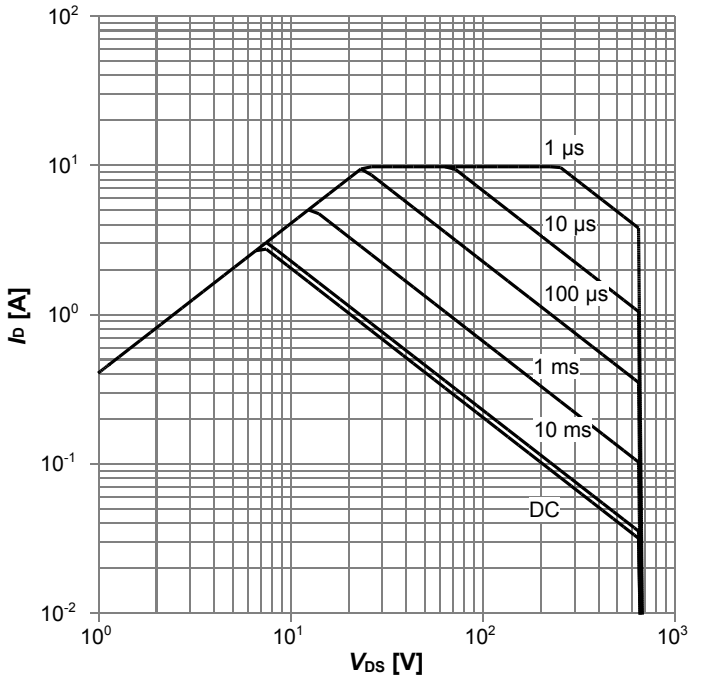

I_D=f(V_{DS}); VGS>7V; T_C=80°C; D=0; parameter: t_p

Diagram 5: Typ. output characteristics

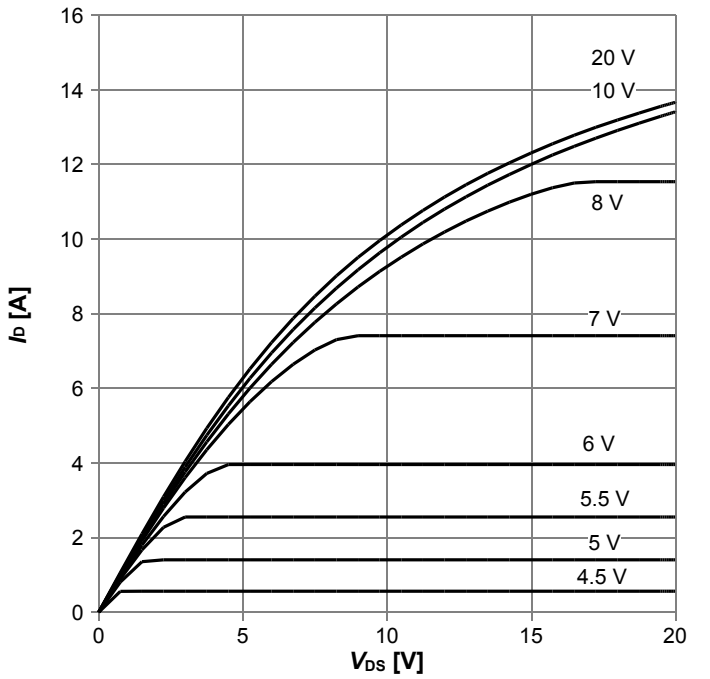

I_D=f(V_{DS}); T_j=25 °C; parameter: V_{GS}

Diagram 6: Typ. output characteristics

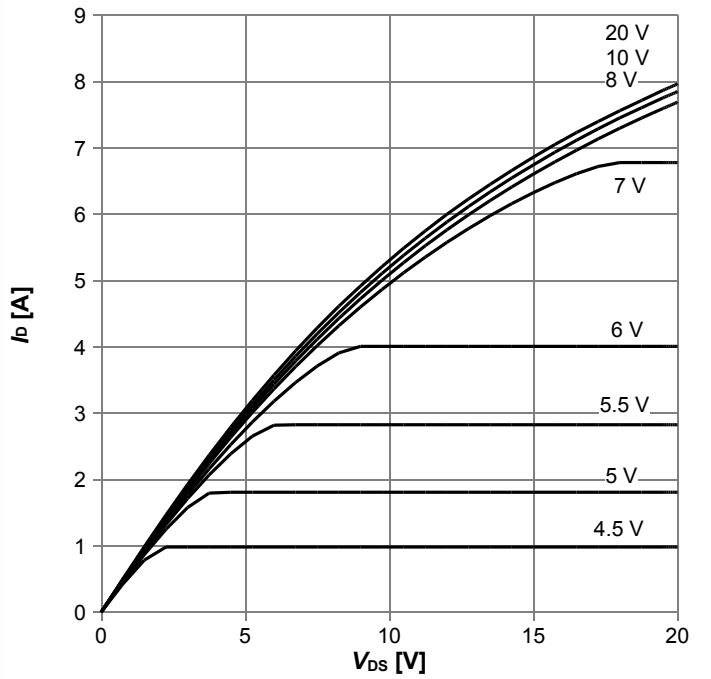

I_D=f(V_{DS}); T_j=125 °C; parameter: V_{GS}

Diagram 7: Typ. drain-source on-state resistance

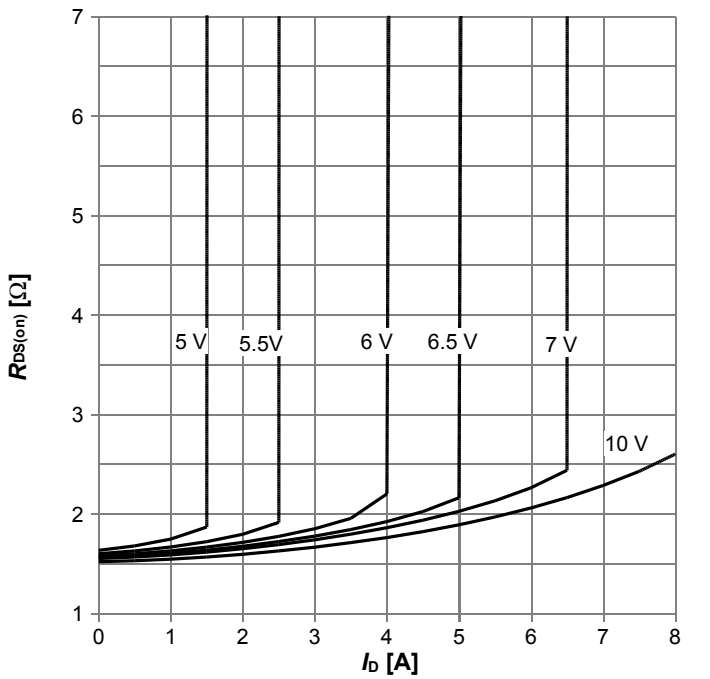

$R_{DS(on)}$=f(I_D); T_j=125 °C; parameter: V_{GS}

Diagram 8: Drain-source on-state resistance

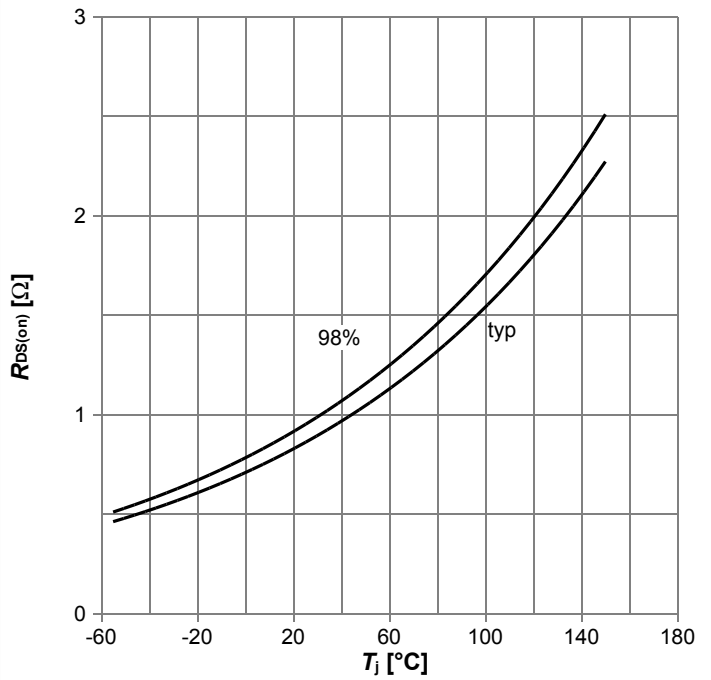

$R_{DS(on)}$=f(T_j); I_D=1.5 A; V_{GS}=10 V

Diagram 9: Typ. transfer characteristics

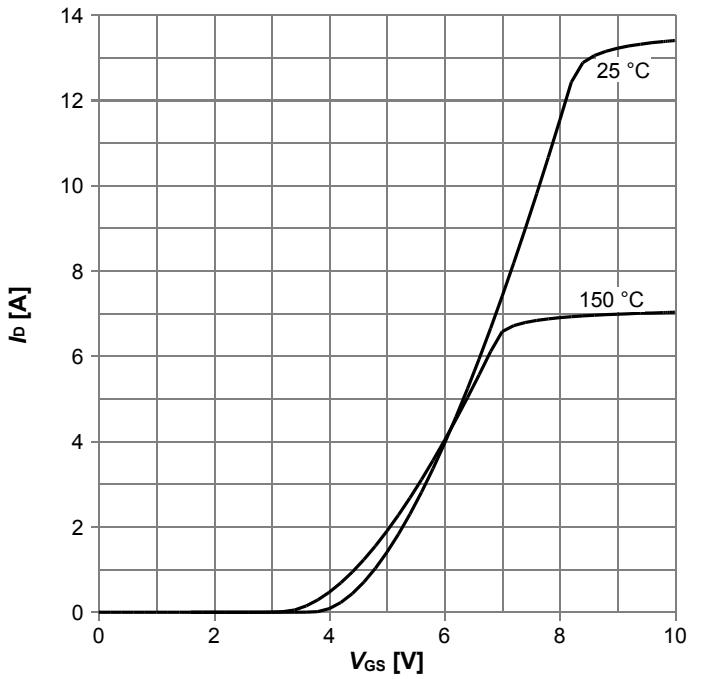

I_D=f(V_{GS}); V_{DS} = 20V; parameter: T_j

Diagram 10: Typ. gate charge

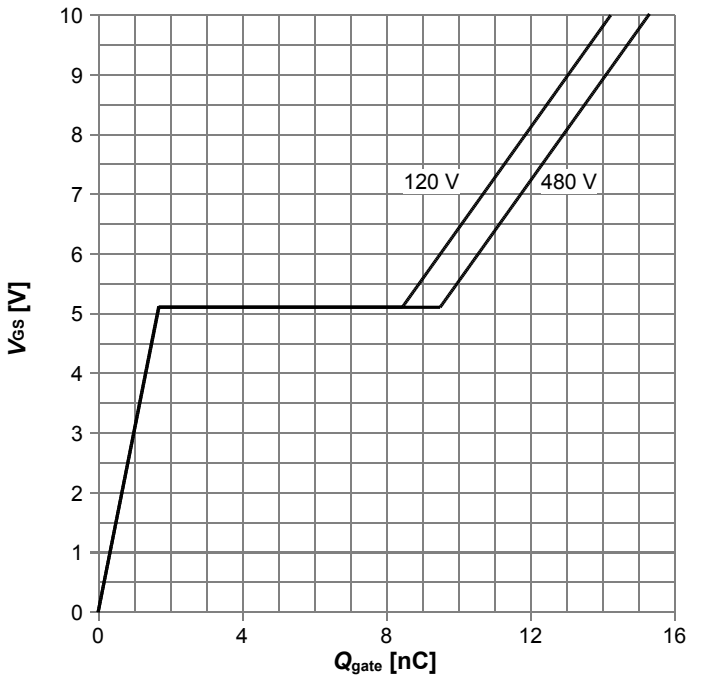

V_{GS}=f(Q_{gate}); I_D=1.5 A pulsed; parameter: V_{DD}

Diagram 11: Avalanche energy

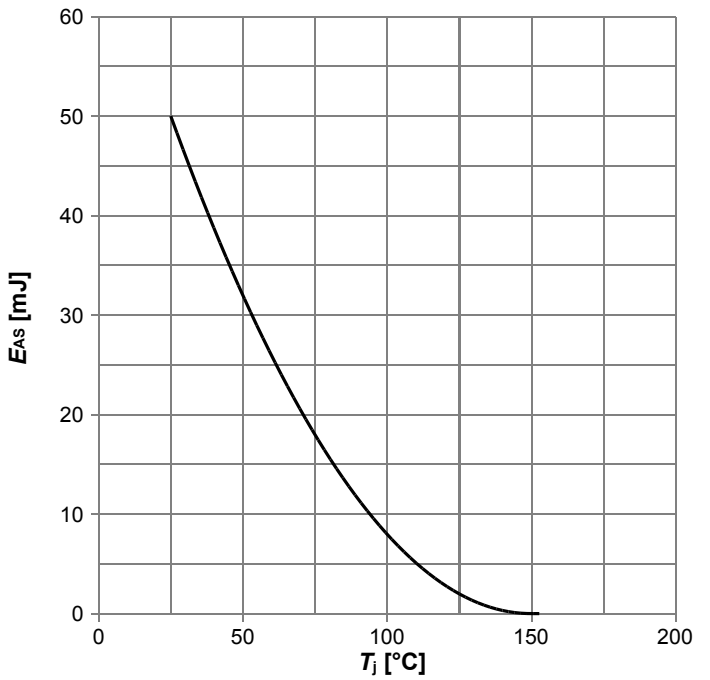

E_{AS}=f(T_j); I_D=1.0 A; V_{DD}=50 V

Diagram 12: Drain-source breakdown voltage

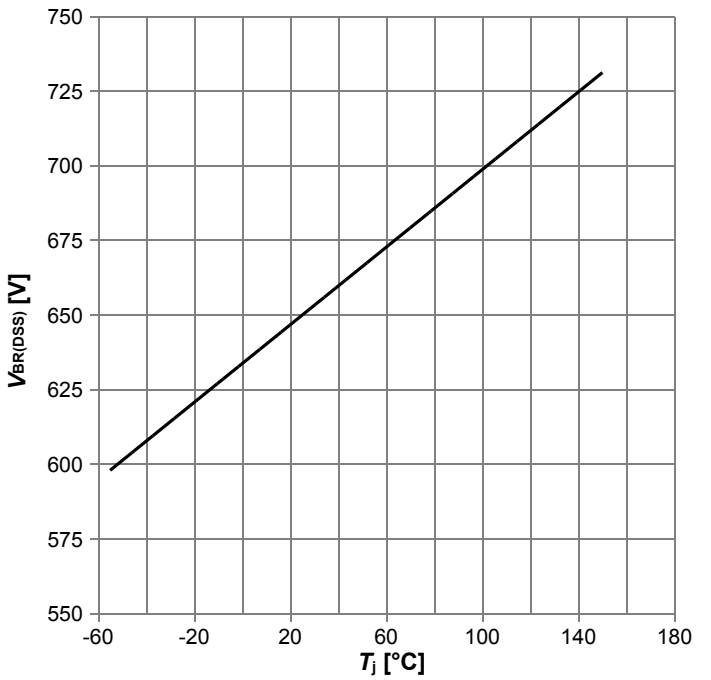

$V_{BR(DSS)}$=f(T_j); I_D=1.0 mA

Diagram 13: Typ. capacitances

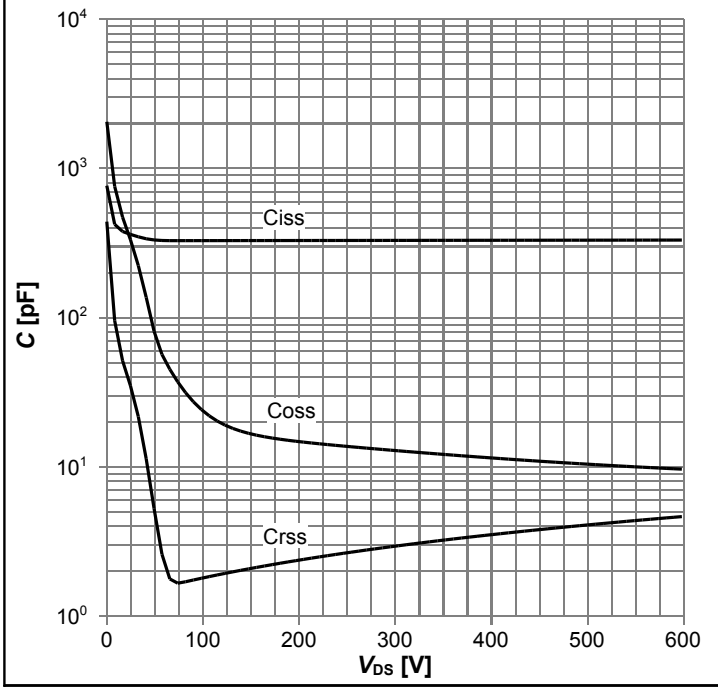

C=f(V_{DS}); V_{GS}=0 V; f=1 MHz

Diagram 14: Typ. Coss stored energy

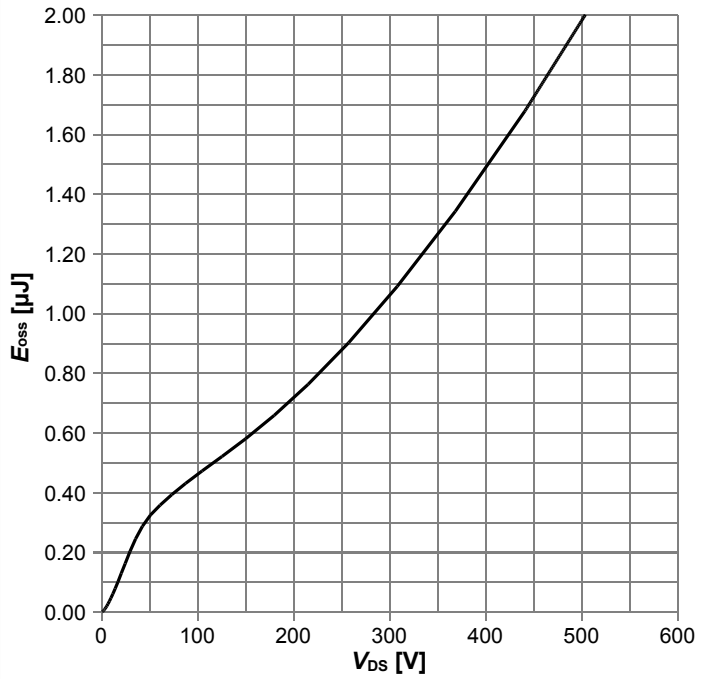

E_{oss}=f(V_{DS})

Diagram 15: Forward characteristics of reverse diode

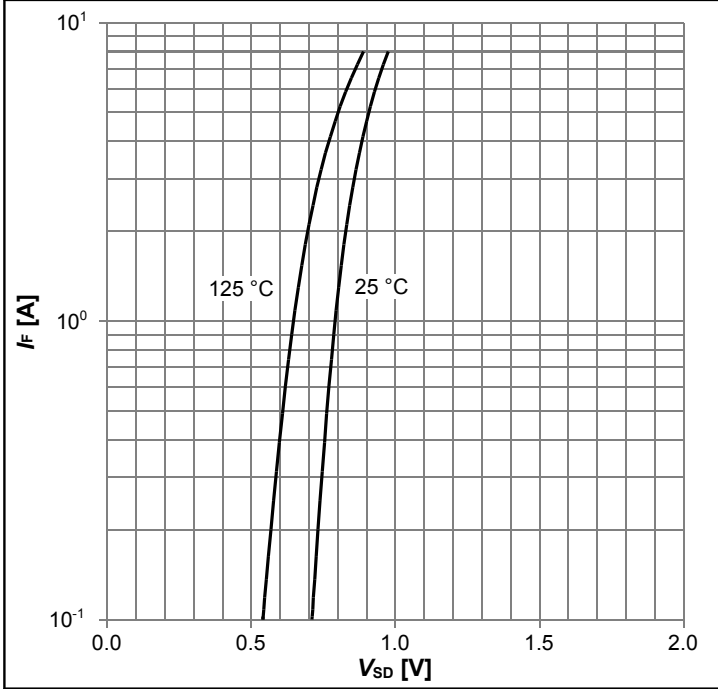

I_F=f(V_{SD}); parameter: T_j

6 Test Circuits

Table 8 Diode characteristics

Test circuit for diode characteristics	Diode recovery waveform
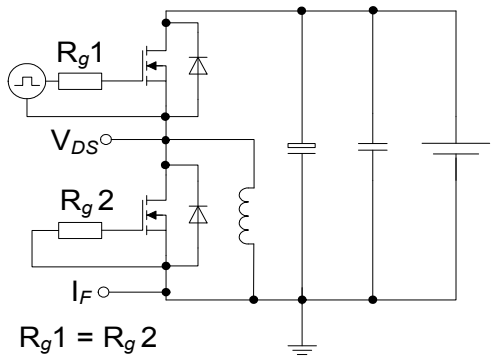	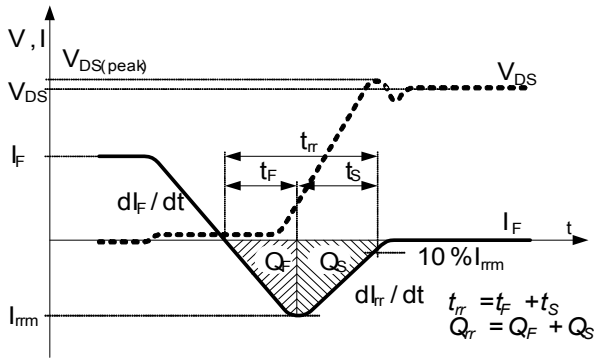

Table 9 Switching times

Switching times test circuit for inductive load	Switching times waveform
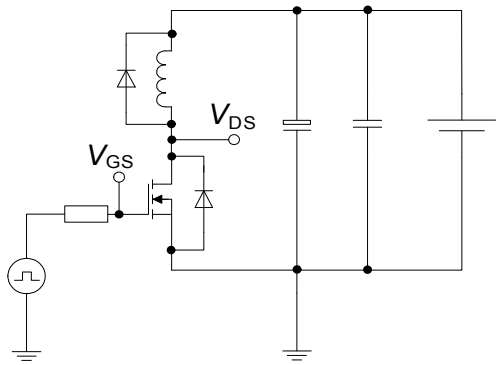	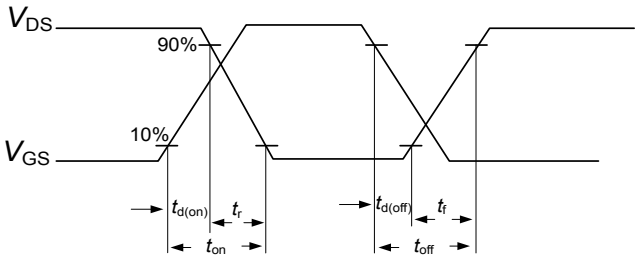

Table 10 Unclamped inductive load

Unclamped inductive load test circuit	Unclamped inductive waveform
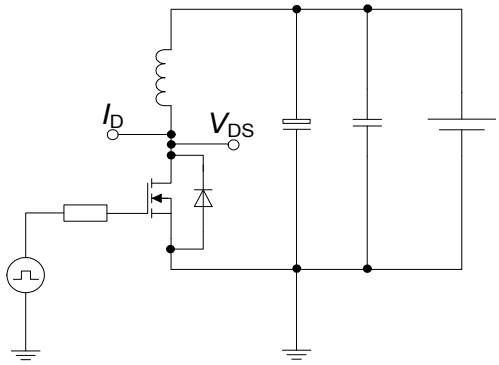	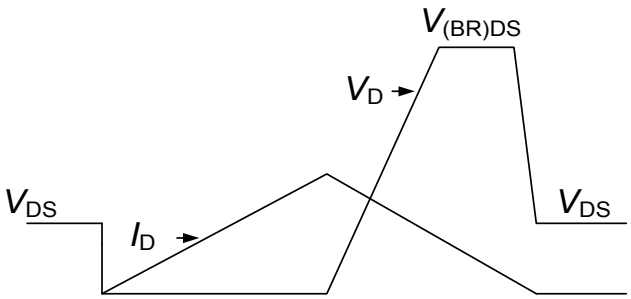

7 Package Outlines

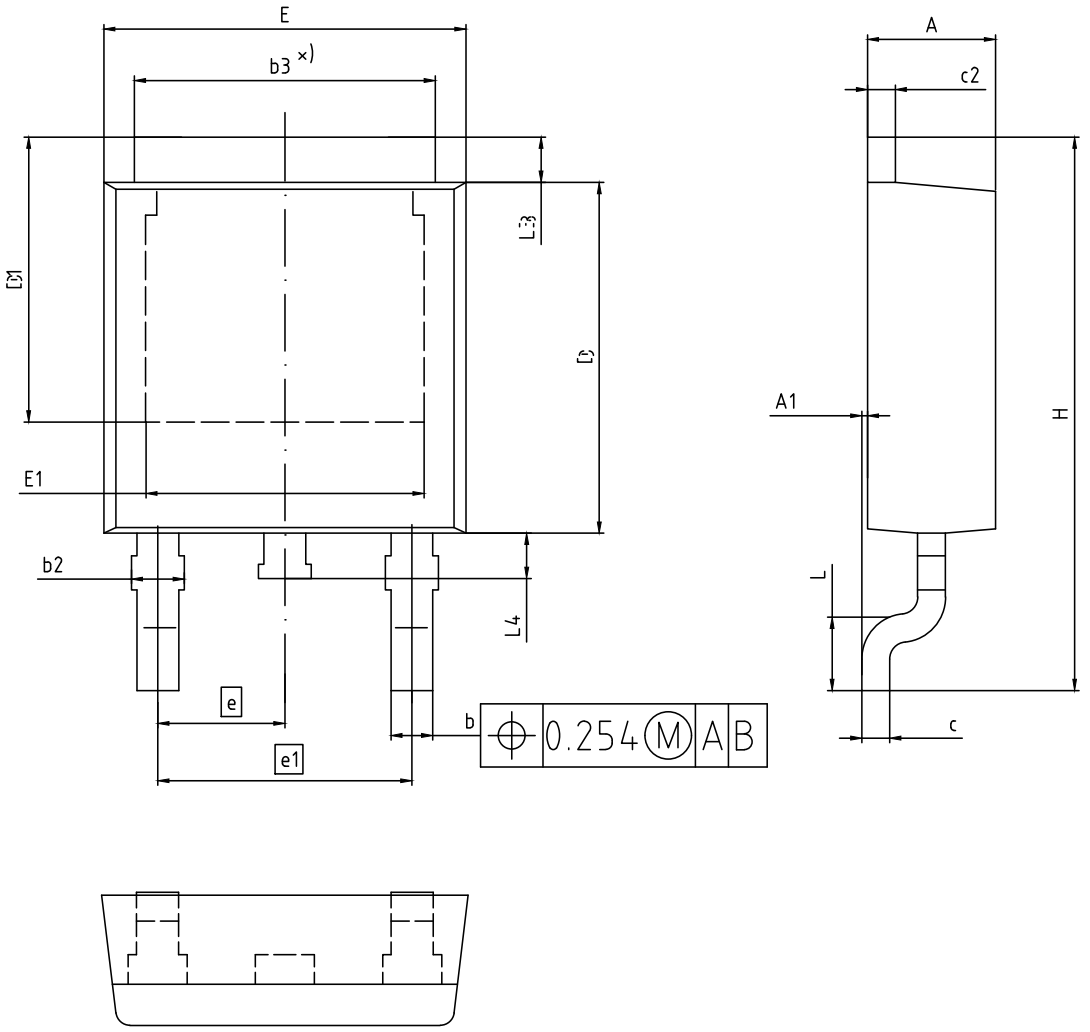

ALL DIMENSIONS REFER TO JEDEC STANDARD TO-252 AND DO NOT INCLUDE MOLD FLASH OR PROTRUSIONS.

DIMENSION	MILLIMETERS	
	MIN.	MAX.
A	2.16	2.41
A1	0.00	0.15
b	0.64	0.89
b2	0.65	1.15
b3	4,95	5.50
c	0.46	0.61
c2	0.40	0.98
D	5.97	6.22
D1	5.02	5.84
E	6.35	6.73
E1	4.32	5.50
e	2.29	
e1	4.57	
N	3	
H	9.40	10.48
L	1.18	1.78
L3	0.89	1.27
L4	0.51	1.02

DOCUMENT NO. Z8B00003328
REVISION 07
SCALE: 10:1 0 1 2mm
EUROPEAN PROJECTION
ISSUE DATE 01.04.2020

Figure 1 Outline PG-TO 252, dimensions in mm

8 Appendix A

Table 11 Related Links

- **IFX C6 Product Brief:** www.infineon.com
- **IFX C6 Portfolio:** www.infineon.com
- **IFX CoolMOS Webpage:** www.infineon.com
- **IFX Design Tools:** www.infineon.com

Revision History

IPD65R950C6

Revision: 2020-05-20, Rev. 2.1

Previous Revision

Revision	Date	Subjects (major changes since last revision)
2.0	2013-07-26	Release of final version
2.1	2020-05-20	Update of the package outlines

Trademarks
All referenced product or service names and trademarks are the property of their respective owners.

We Listen to Your Comments
Any information within this document that you feel is wrong, unclear or missing at all? Your feedback will help us to continuously improve the quality of this document. Please send your proposal (including a reference to this document) to:
erratum@infineon.com

Published by
Infineon Technologies AG
81726 München, Germany
© 2020 Infineon Technologies AG
All Rights Reserved.

Legal Disclaimer
The information given in this document shall in no event be regarded as a guarantee of conditions or characteristics (“Beschaffenheitsgarantie”) .

With respect to any examples, hints or any typical values stated herein and/or any information regarding the application of the product, Infineon Technologies hereby disclaims any and all warranties and liabilities of any kind, including without limitation warranties of non-infringement of intellectual property rights of any third party.
In addition, any information given in this document is subject to customer’s compliance with its obligations stated in this document and any applicable legal requirements, norms and standards concerning customer’s products and any use of the product of Infineon Technologies in customer’s applications.
The data contained in this document is exclusively intended for technically trained staff. It is the responsibility of customer’s technical departments to evaluate the suitability of the product for the intended application and the completeness of the product information given in this document with respect to such application.

Information
For further information on technology, delivery terms and conditions and prices please contact your nearest Infineon Technologies Office (www.infineon.com).

Warnings
Due to technical requirements, components may contain dangerous substances. For information on the types in question, please contact the nearest Infineon Technologies Office.
The Infineon Technologies component described in this Data Sheet may be used in life-support devices or systems and/or automotive, aviation and aerospace applications or systems only with the express written approval of Infineon Technologies, if a failure of such components can reasonably be expected to cause the failure of that life-support, automotive, aviation and aerospace device or system or to affect the safety or effectiveness of that device or system. Life support devices or systems are intended to be implanted in the human body or to support and/or maintain and sustain and/or protect human life. If they fail, it is reasonable to assume that the health of the user or other persons may be endangered.