SYMB	REVISIONS

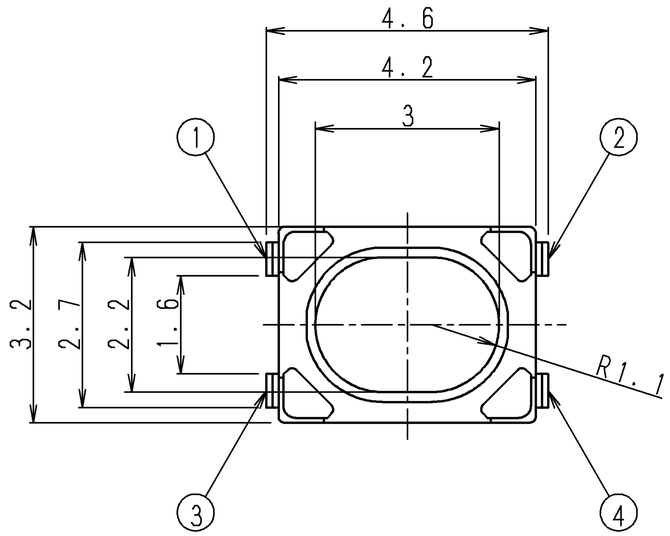

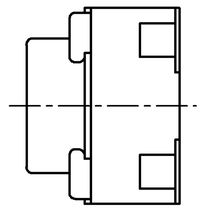

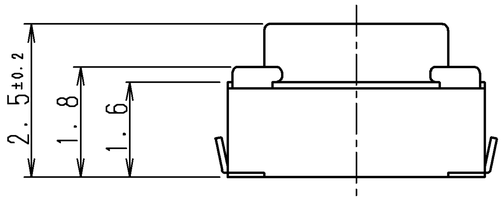

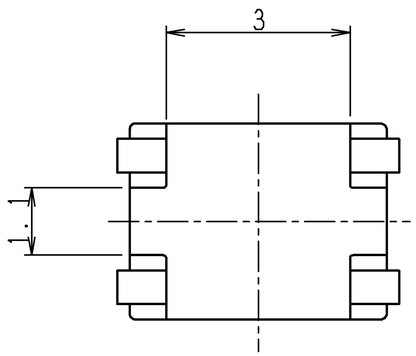

PRINTED CIRCUIT MOUTING HOLE DIMENSION
推奨ランド寸法(10:1)

(WHEN VIEWED FROM SWITCH MOUTING FACE)
(スイッチ取り付面より見る)

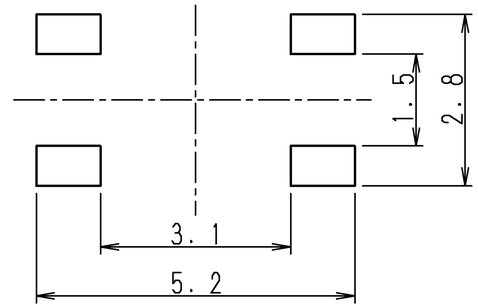

CIRCUIT DIAGRAM
回路図

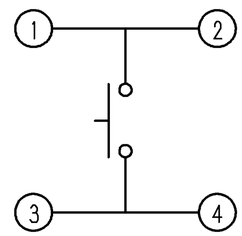

NOTE 1. TAPING SPECIFICATION TO BE ACCORDANCE WITH TRP-901.
注記　テーピング仕様書は，TRP-901に依る。

PART NO.	MATERIAL	SPEC/NAME	FINISH	REMARK

TOLERANCE UNLESS OTHERWISE SPEC.	
BASIC DIMENSIONS	TOLERANCES
UP TO 10	±0.3
ABOVE 10 TO 100	±0.5
ABOVE 100	±0.8
ANGULAR DIMENSIONS	±3°

NO.	SYMB	DATE	APPD	CHKD	DSGD

ALPS ELECTRIC CO., LTD.

DSGD. 2010.12.25 DG2 M. NAKAJIMA	SCALE 10:1	NO. SKRPANE010
CHKD. 2010.12.25 DG2 H. KOZUMA		TITLE PRODUCT DRAWING(製品図)
APPD. 2010.12.25 DG2 Y. KATO	UNIT mm	DOCUMENT NO. SKRPANE010.1100.31

APPROVED

(A3)