RoHS

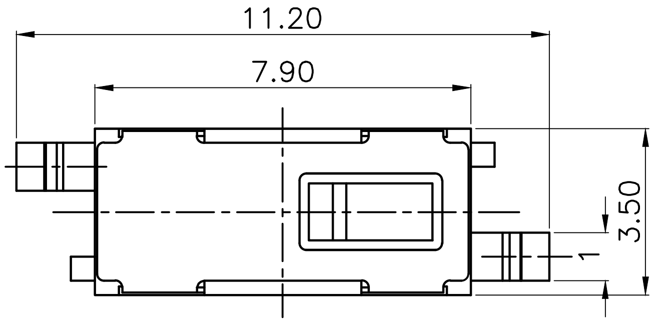

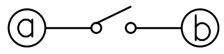

Circuit Diagram

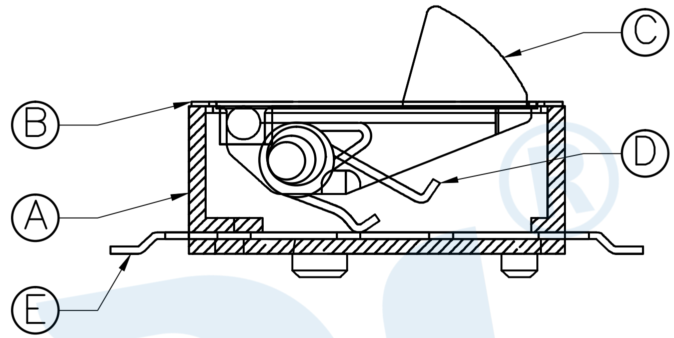

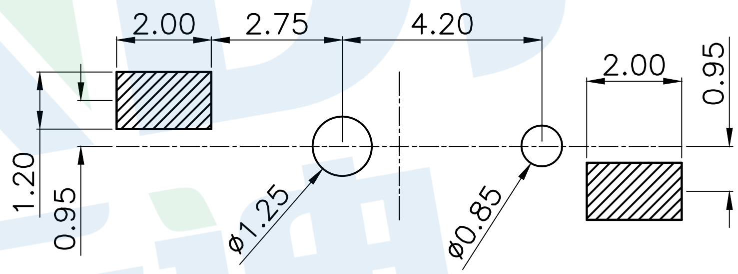

PCB Layout(Pattern side)

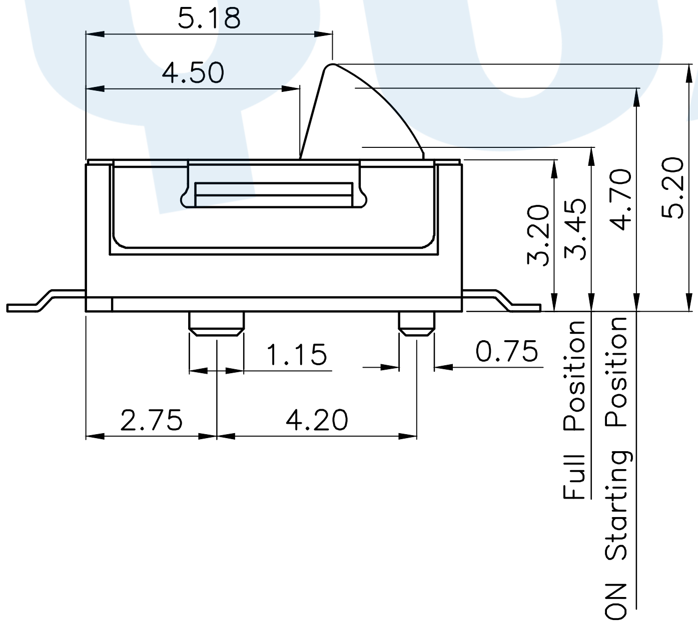

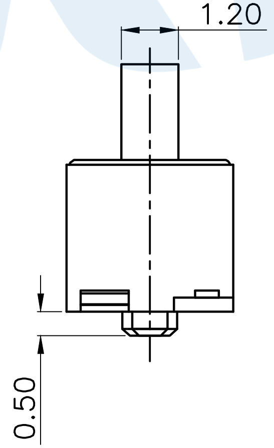

Technical Parameters

1.Rated current: DC 12V 50mA

2.Operating force:30±10gf

3.Mechanical life: 100,000 times

NO.	Name	Number	Qty	Materil	Remarks
E	Terminal		2	Phosphor bronze	Silvering
D	Contact spring		1	SUS	Silvering
C	Button		1	Nylon	Black
B	Cover		1	SUS	Black
A	Base		1	LCP	Black

YUANDI® 元迪 Yuandi Electronics Co,Ltd

design		date
Review		date
Approved		date
name	DETECTION SWITCH	
model	TQ-2514	
Drawing number:		
Proportion	1:1	
unit	mm	
gape number		A4

Tolerance not specified	
angle	±2°
10~30	±0.30
5~10	±0.20
~ 5	±0.10

modify	Review	Approved