**Part Number:** 0389690006

**Status:** Active

**Description:** 12.70mm Pitch, Single Row Tri-Barrier Terminal Strip, without Mounting Ends, 6 Circuits

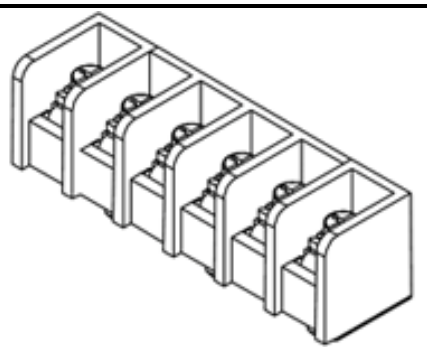

*Series image - Reference only*

**Documents:**
3D Model
Drawing (PDF)
RoHS Certificate of Compliance (PDF)

**Agency Certification**

| | |
|---|---|
| UL | E48521 |

**General**

| | |
|---|---|
| Product Family | Terminal Blocks |
| Series | 38969 |
| Application | N/A |
| Component Type | One Piece |
| Product Name | TSE |
| Type | Barrier Strip |
| UPC | 822350944984 |

**Physical**

| | |
|---|---|
| Circuits (Loaded) | 6 |
| Circuits (maximum) | 6 |
| Entry Angle | 90° Angle |
| Lock to Mating Part | None |
| Net Weight | 51.100/g |
| Number of Rows | 1 |
| Orientation | Vertical |
| PC Tail Length | 4.00mm |
| PCB Retention | None |
| PCB Thickness - Recommended | 1.57mm |
| Panel Mount | No |
| Pitch - Mating Interface | 12.70mm |
| Pitch - Termination Interface | 12.70mm |
| Polarized to Mating Part | Yes |
| Shrouded | Tri-Barrier |
| Stackable | No |
| Surface Mount Compatible (SMC) | No |
| Temperature Range - Operating | -40° to +120°C |
| Wire Size AWG | 10, 12, 14, 16, 18, 20, 8 |

**Electrical**

| | |
|---|---|
| Current - Maximum per Contact | 50.0A |
| Voltage - Maximum | 600V |

**Material Info**

**Reference - Drawing Numbers**

| | |
|---|---|
| Sales Drawing | SD-38969-001 |

**EU ELV**
**Not Relevant**

**EU RoHS**
**Compliant**

**China RoHS**

**REACH SVHC**
Not Contained Per - ED/61/2018 (27 June 2018)

**Halogen-Free Status**
**Low-Halogen**

For more information, please visit Contact US

| | |
|---|---|
| China ROHS | Green Image |
| ELV | Not Relevant |
| RoHS Phthalates | Not Contained |

**Search Parts in this Series**
38969 Series