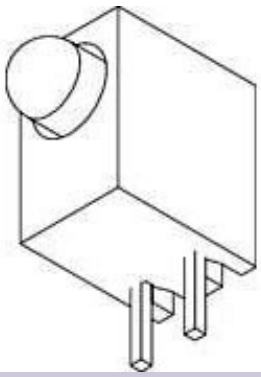

Features / Options

- Vertical Positioning
- Multi-Unit Construction
- Polarity Orientation Holder
- Choice of Colors and Lenses

Applications / Uses

- Board Level Status Indicators
- Board Level Fault Indicators
- Warning/Alarm Signaling
- Circuit Fault Finder Indicators

Part Number:	SPEC	Brightness	Material	Emitted Color	Wavelength	Intensity	View Angle	Voltage
SSF-LXH103BID		STANDARD	GaAsP	Blinking Red	635		60	3-15
SSF-LXH103GD		STANDARD	GaP	Green	565	30	60	2.1
SSF-LXH103GD		STANDARD	GaP	Green	565	30	60	2.1
SSF-LXH103HGW		STANDARD	GaP	Red/ Green	695/565	4/8	60	2.1
SSF-LXH103ID		STANDARD	GaAsP	Red	635	30	60	2.1
SSF-LXH103ID		STANDARD	GaAsP	Red	635	30	60	2.1
SSF-LXH103LGD		STANDARD	GaP	Green	565	15	60	1.8
SSF-LXH103LID		STANDARD	GaAsP	Red	635	40	60	1.8
SSF-LXH103LYD		STANDARD	GaAsP	Yellow	585		60	1.8
SSF-LXH103SID		HIGH	AlInGaP	Red	636	100	60	2.0

UNCONTROLLED DOCUMENT

PART NUMBER	REV.
SSF-LXH103LGD	F

REV.	E.C.N. NUMBER AND REVISION COMMENTS	DATE
A	REDRAWN./	9.21.03
B	CHG'D LEAD LENGTH./	10.2.93
C	E.C.N. #10285	12.18.96
D	E.C.N. #10295.	1.12.97
E	E.C.N. #10304.	2.03.97
F	E.C.N. #11148 & REDRAWN	12.06.04

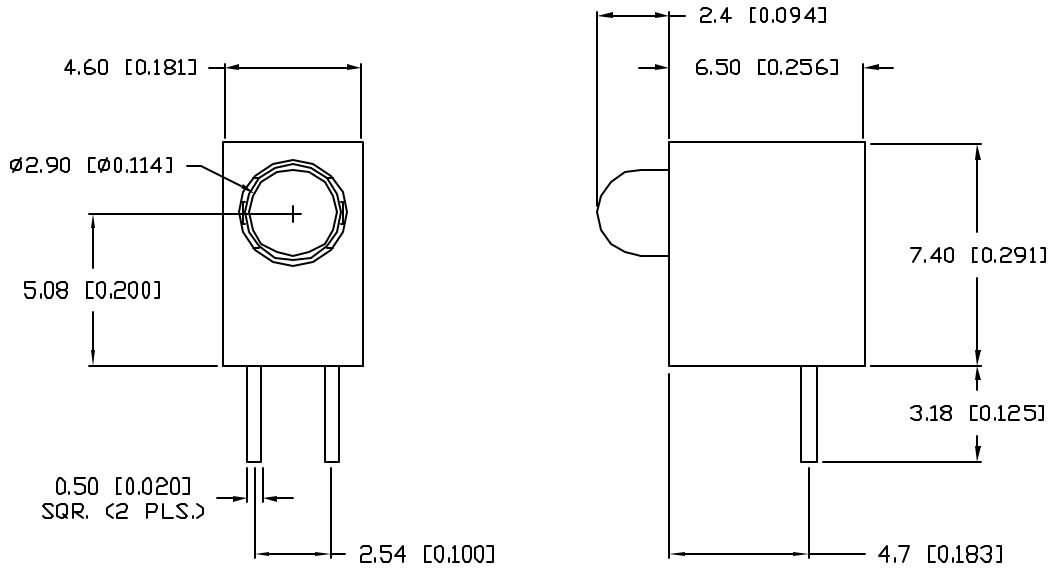

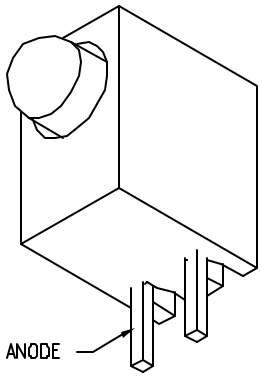

ELECTRO-OPTICAL CHARACTERISTICS T_A=25°C I_f= 20mA

PARAMETER	MIN	TYP	MAX	UNITS	TEST COND
PEAK WAVELENGTH		565 (GREEN)		nm	
FORWARD VOLTAGE		2.1	2.5	V_f	
REVERSE VOLTAGE	5.0			V_r	I_r=100µA
AXIAL INTENSITY		15		mcd	If=20mA
	1.0	15		mcd	If=2mA
VIEWING ANGLE		80		2x theta	

EMITTED COLOR: GREEN

EPOXY LENS FINISH: GREEN DIFFUSED

LIMITS OF SAFE OPERATION AT 25°C

PARAMETER	MAX	UNITS
PEAK FORWARD CURRENT*	150	mA
STEADY CURRENT	25	mA
POWER DISSIPATION	105	mW
DERATE FROM 25°C	—1.6	mW/°C
OPERATING, STORAGE TEMP.	-40 TO +85	°C
SOLDERING TEMP.	+260	°C
2.0mm FROM BODY		3 SEC. MAX

* t<10µS

NOTES:

1. SSH-LXH103 HOLDER.
2. SSL-LX3044LGD LED.

Pb

UNCONTROLLED DOCUMENT

*UNLESS OTHERWISE SPECIFIED TOLERANCES PER DECIMAL PRECISION ARE: X=±1 (±0.039), X.X=±0.5 (±0.020), X.XX=±0.25 (±0.010), X.XXX=±0.127 (±0.005). LEAD SIZE=±0.05 (±0.002), LEAD LENGTH=±0.75 (±0.030). MIN= +DECIMAL PRECISION -0.00 MAX.= +0.00 -DECIMAL PRECISION

REV.	PART NUMBER
F	SSF-LXH103LGD

T-3mm SINGLE LEVEL, FAULT INDICATOR, LOW CURRENT OPERATION, GREEN DIFFUSED.

CONFIDENTIAL INFORMATION
THE INFORMATION CONTAINED IN THIS DOCUMENT IS THE PROPERTY OF LUMEX INC. EXCEPT AS SPECIFICALLY AUTHORIZED IN WRITING BY LUMEX INC., THE HOLDER OF THIS DOCUMENT SHALL KEEP ALL INFORMATION CONTAINED HEREIN CONFIDENTIAL AND SHALL PROTECT SAME IN WHOLE OR IN PART FROM DISCLOSURE AND DISSEMINATION TO ALL THIRD PARTIES.

RELIABILITY NOTE
OUR MANY YEARS OF EXPERIENCE DATA ACCUMULATION INDICATE THAT SOLDER HEAT IS A MAJOR CAUSE OF EARLY AND FUTURE FAILURE. PLEASE PAY ATTENTION TO YOUR SOLDERING PROCESS.

LUMEX

DRAWN BY:	CHECKED BY:	APPROVED BY:	DATE: 12.06.04
JD			PAGE: 1 OF 1
			SCALE: N/A