molex
one company › a world of innovation

This document was generated on 10/03/2014

PLEASE CHECK WWW.MOLEX.COM FOR LATEST PART INFORMATION

Part Number: 52808-2471

Status: Active

Overview: FFC-FPC (SMT)

Description: 1.00mm Pitch Easy-On™ Type FFC/FPC Connector, Housing Assembly, Vertical, Non-ZIF Receptacle, 24 Circuits, Lead-Free

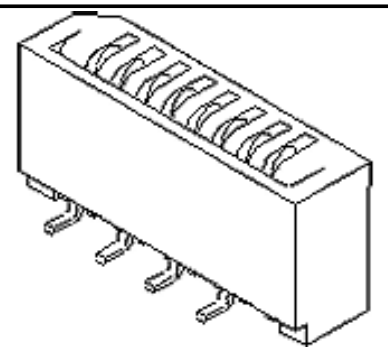

Series

image - Reference only

Documents:

Drawing (PDF)
Product Specification PS-52808-004 (PDF)
Packaging Specification SPK-52808-001 (PDF)
RoHS Certificate of Compliance (PDF)

Agency Certification

UL	E29179

General

Product Family	FFC/FPC Connectors
Series	52808
Overview	FFC-FPC (SMT)
Product Name	Easy-On™
UPC	822348136339

Physical

Circuits (Loaded)	24
Circuits (maximum)	24
Color - Resin	Natural
Contact Position	N/A
Durability (mating cycles max)	10
Entry Angle	Vertical
Mated Height	5.05mm
Material - Metal	Phosphor Bronze
Material - Plating Mating	Tin-Bismuth
Material - Plating Termination	Tin-Bismuth
Material - Resin	High Temperature Thermoplastic
Net Weight	602.600/mg
Number of Rows	1
Orientation	Vertical
PCB Locator	No
PCB Retention	None
Packaging Type	Embossed Tape on Reel
Pitch - Mating Interface	1.00mm
Pitch - Termination Interface	1.00mm
Polarized to PCB	No
Stackable	No
Surface Mount Compatible (SMC)	Yes
Temperature Range - Operating	-20°C to +80°C
Termination Interface: Style	Surface Mount
Wire/Cable Type	FFC/FPC

Electrical

Current - Maximum per Contact	0.5A
Voltage - Maximum	125V AC (RMS)/DC

Material Info

Reference - Drawing Numbers

Packaging Specification	SPK-52808-001
Product Specification	PS-52808-004, RPS-52808-038, RPS-52808-040, RPS-52808-045, RPS-52808-049, RPS-52808-053

EU RoHS
ELV and RoHS Compliant
REACH SVHC
Contains SVHC: No
Low-Halogen Status
Not Low-Halogen

China RoHS

Need more information on product environmental compliance?

Email productcompliance@molex.com
For a multiple part number RoHS Certificate of Compliance, click here

Please visit the Contact Us section for any non-product compliance questions.

Search Parts in this Series
52808Series

Mates With
Molex Premo-Flex FFC. Be sure to match like plating

This document was generated on 10/03/2014
PLEASE CHECK WWW.MOLEX.COM FOR LATEST PART INFORMATION