CUI INC®

MODEL: CMT-1075-SMT-TR | **DESCRIPTION:** PIEZO BUZZER TRANSDUCER

FEATURES

- washable
- low current
- externally driven

RoHS

SPECIFICATIONS

parameter	conditions/description	min	typ	max	units
operating voltage				25	Vp-p
current consumption	at 5 Vp-p, 5,200 Hz square wave			5	mA
rated frequency			5,200		Hz
sound pressure level	at 10 cm, 5 Vp-p, 5,200 Hz square wave	75			dB
electrostatic capacity	at 100 Hz/1 V	7,700	11,000	14,300	pF
dimensions	Ø10 x 3.1				mm
weight				0.3	g
material	LCP (black)				
terminal	SMT type (Au plating)				
operating temperature		-20		70	°C
storage temperature		-30		80	°C
RoHS	yes				

Notes: 1. All specifications measured at 5~35°C, humidity at 45~85%, under 86~106 kPa pressure, unless otherwise noted.

SOLDERABILITY

parameter	conditions/description	min	typ	max	units
reel storage	at relative humidty <60%			30	°C
reflow soldering[2]	see recommended reflow soldering profile			260	°C
drying conditions[3]	bake at 40°C for 24 hours				

Note: 2. It is recommended to reflow solder within 48 hours from opening vacuum packaging at a temperature <30°C & relative humidity <60%.
3. When out of packaging for more than 48 hours.

SMT Reflow Solder Profile (Pb Free)

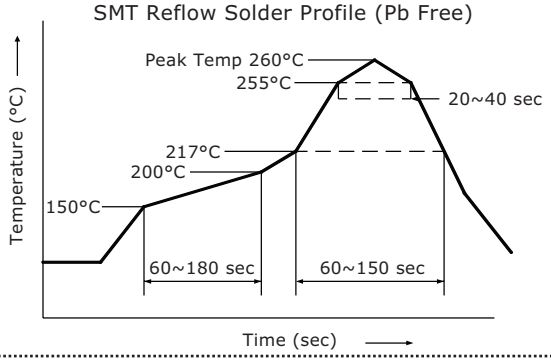

MECHANICAL DRAWING

units: mm[inch]
tolerance: ±0.5 mm

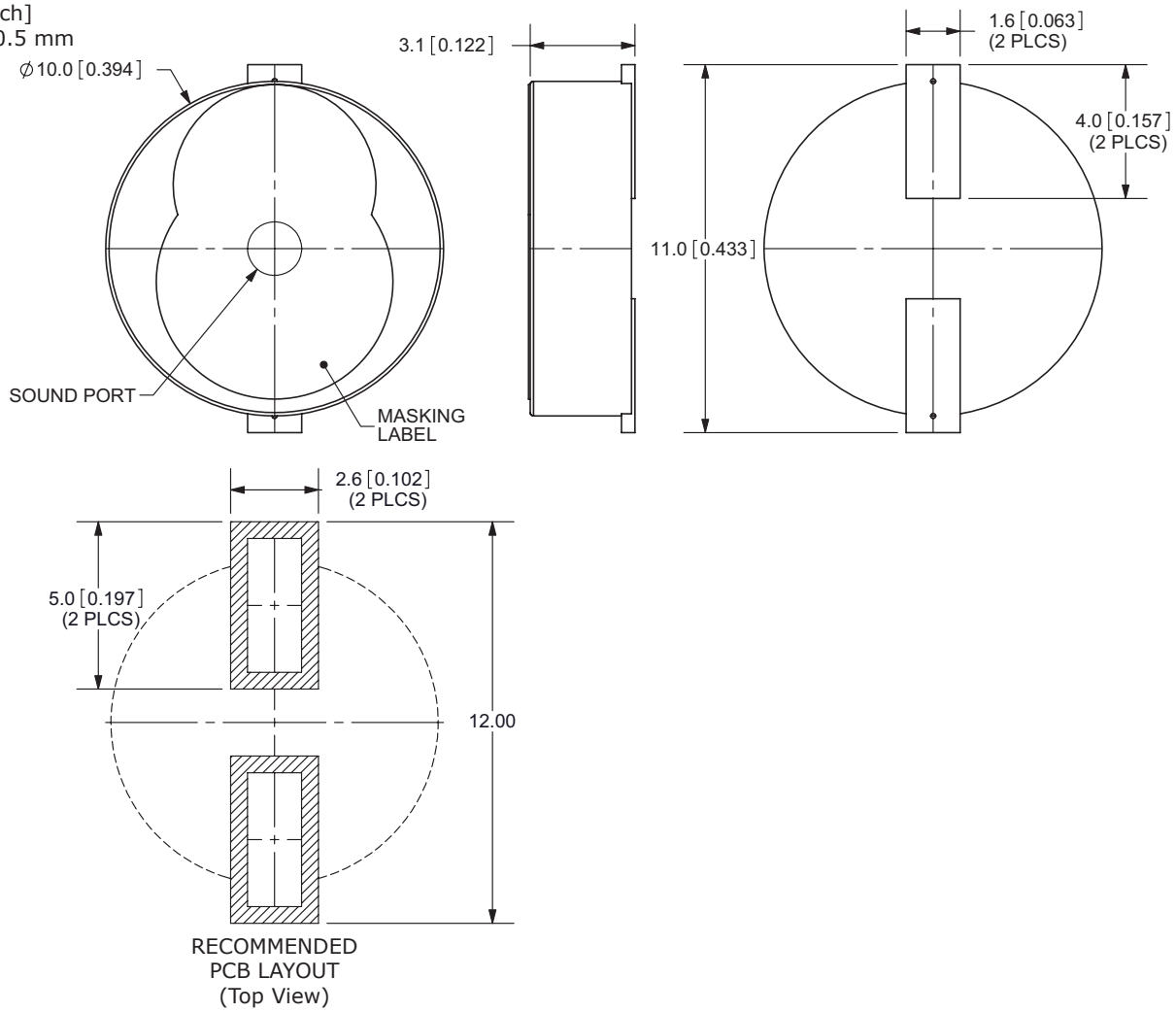

FREQUENCY RESPONSE CURVE

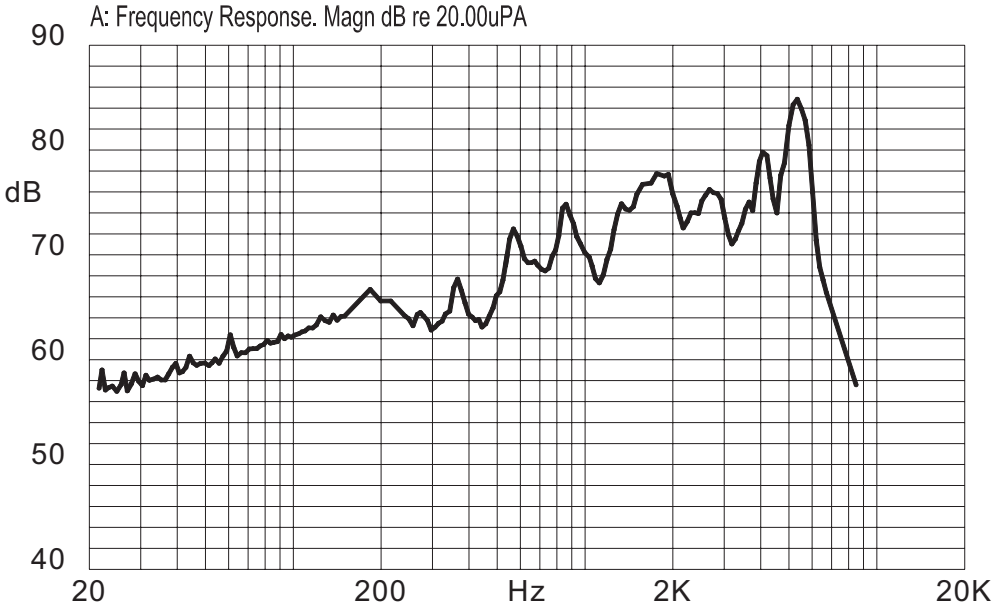

PACKAGING

units: mm

Reel Size: Ø330 mm
Inner Box Size: 330 x 330 x 30 mm
Carton Size: 370 x 350 x 350 mm
Reel QTY: 800 pcs per reel
Carton QTY: 8,000 pcs per carton

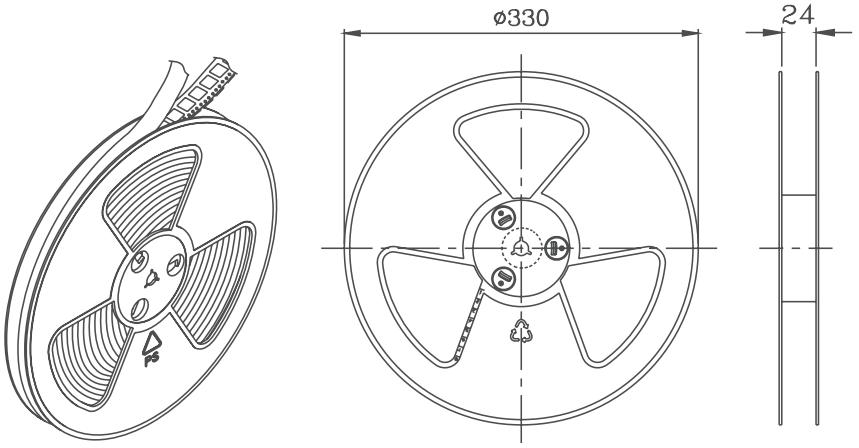

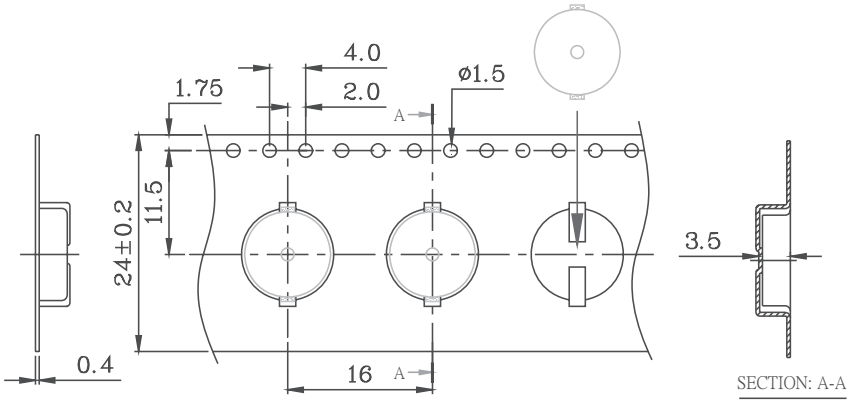

Lot No.	XXXXXXXXXX
Model No.	XXXXXXXXXX
Quantity.	XXXX Pcs
Date: DD MM YY G MADE IN CHINA	
CUI Inc	

* The label sticked on inner boxes and the outer of carton.

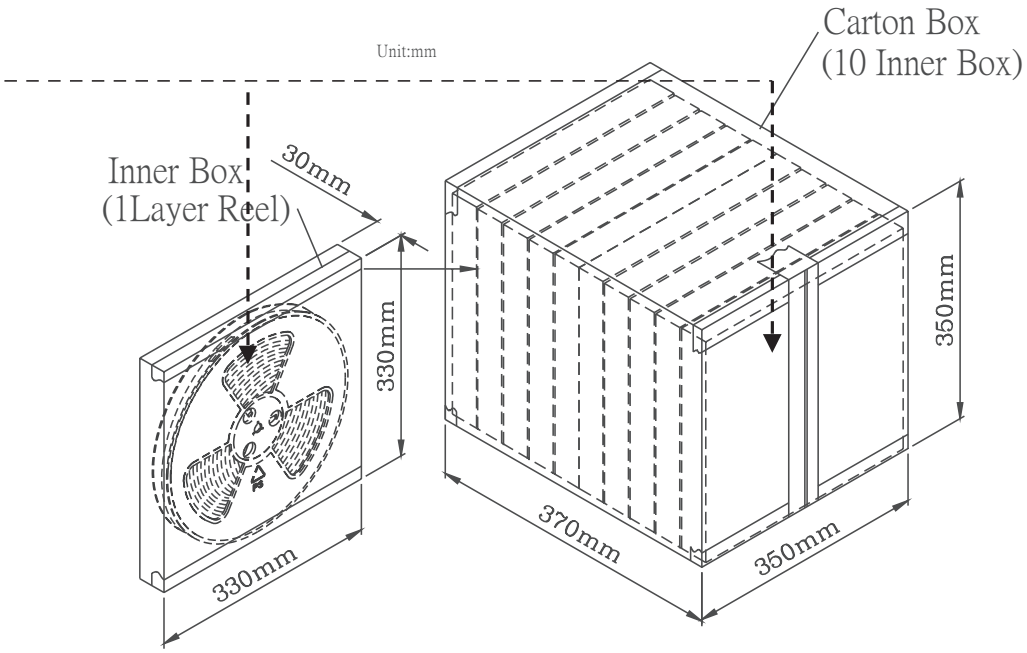

REVISION HISTORY

rev.	description	date
1.0	initial release	07/13/2010
1.01	updated part number, added TR package option, applied new spec template	05/03/2013
1.02	added storage and drying conditions, and tape and reel packaging details	07/25/2019

The revision history provided is for informational purposes only and is believed to be accurate.

CUI INC®

Headquarters
20050 SW 112th Ave.
Tualatin, OR 97062
800.275.4899

Fax 503.612.2383
cui.com
techsupport@cui.com

CUI offers a one (1) year limited warranty. Complete warranty information is listed on our website.

CUI reserves the right to make changes to the product at any time without notice. Information provided by CUI is believed to be accurate and reliable. However, no responsibility is assumed by CUI for its use, nor for any infringements of patents or other rights of third parties which may result from its use.

CUI products are not authorized or warranted for use as critical components in equipment that requires an extremely high level of reliability. A critical component is any component of a life support device or system whose failure to perform can be reasonably expected to cause the failure of the life support device or system, or to affect its safety or effectiveness.