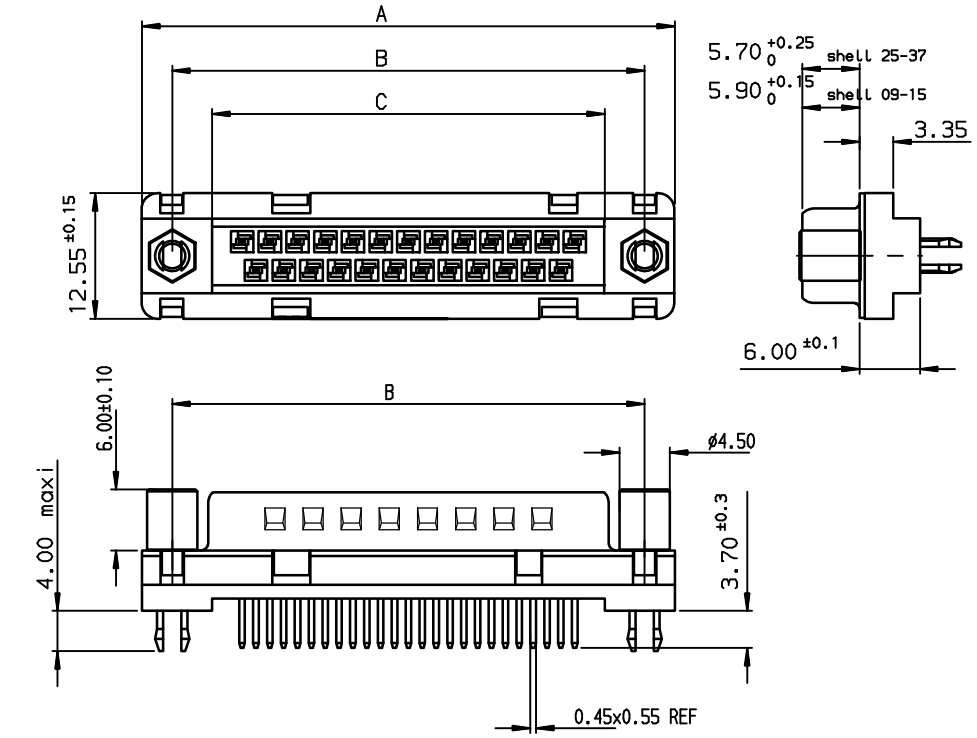

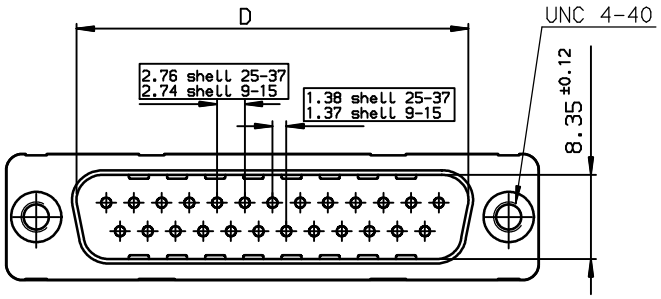

SHELL	A±0.38	B±0.12	C±0.10	D±0.25 0	E±0.07	PART NUMBER
09	30.81	24.99	16.96	16.79	10.96	D09P24B6GV00
15	39.14	33.32	25.18	25.12	19.18	D15P24B6GV00
25	53.03	47.04	39.12	38.84	33.12	D25P24B6GV00
37	69.32	63.50	55.68	55.30	49.68	D37P24B6GV00
37	69.32	63.50	55.68	55.30	49.68	D37P24B4GV00

SHELL	A±0.38	B±0.12	C±0.10	D±0.25 0	E±0.07	PART NUMBER
09	30.81	24.99	16.96	16.79	10.96	D09P24B6GV00LF
15	39.14	33.32	25.18	25.12	19.18	D15P24B6GV00LF
25	53.03	47.04	39.12	38.84	33.12	D25P24B6GV00LF
37	69.32	63.50	55.68	55.30	49.68	D37P24B6GV00LF
37	69.32	63.50	55.68	55.30	49.68	D37P24B4GV00LF

PC card drilling dimensions(after plating)

(thickness 2.40±0.20mm)

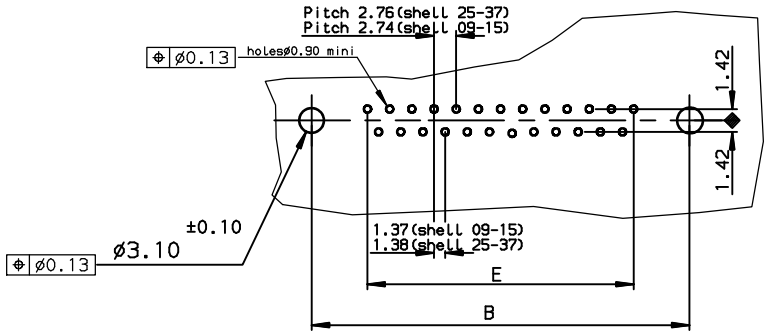

GENERAL CHARACTERISTICS AND ROHS INFORMATIONS:
SEE DRAWING C01-8646-0000

European Views

rev	ecn no	dr	date
C	-	-	1996/09/09
D	LS05-001	MPE	2005/03/12
E	LS05-0056	MPE	2005/06/27
F	LS05-0070	LGO	2005/11/03
G	LS06-0097	LGO	2006/07/29
-	-	-	-
-	-	-	-

www.fciconnect.com

surface ISO 1302 | tolerance std ISO 406 ISO 1101 | projection | mm

TOLERANCES UNLESS OTHERWISE SPECIFIED

Dr	LELEON	1992/09/14	ANGULAR	LINEAR	0.X	±0.1
Eng	PESSON	1992/09/14			0.XX	±0.1
Chr	LEGARE	1992/09/14	0.XX° ±2°		0.XXX	±0.1
Appr	LEGARE	1992/09/14	Product family		D-SUB	

size A3 | Scale 2 | ECN LS06-0097 | Spec ref -

title: MALE CONNECTOR DELTA D ST straight,solder type for

dwg no C01-8646-0107 | Rev. G

catalog no - | CUSTOMER | sheet 1 of 1

REV F - 2006-04-17

Copyright FCI.